CITY OF WAVELAND
POLE BARN REPLACEMENT(S) RE-BID

Project Manual

prepared for

CITY OF WAVELAND

WAVELAND

PREPARED BY:

COMPTON
ENGINEERING, INC.

3036 LONGFELLOW DR.
BAY ST. LOUIS, MISSISSIPPI 39520

PHONE: 228-467-2770
FAX: 228-467-2720

REV. O – ISSUED FOR CONSTRUCTION (10-19-22)

221-019.006

PROJECT MANUAL

FOR

CITY OF WAVELAND
POLE BARN REPLACEMENT(S) RE-BID

PREPARED FOR

CITY OF WAVELAND

* * *

CONSISTING OF:

BIDDING REQUIREMENTS

CONTRACT FORMS

CONDITIONS OF THE CONTRACT

SPECIFICATIONS

DRAWINGS

* * *

REV. O – ISSUED FOR CONSTRUCTION (10/19/2022)

CE JOB NO. 221-019.006

PUBLIC WORKS FACILITY
POLE BARN REPLACEMENT(S) RE-BID

TABLE OF CONTENTS

		PAGE(S)
PART 1 – BIDDING REQUIREMENTS		
SECTION 00090	ADVERTISEMENT FOR BIDS	00900-1 to 00090-2
SECTION 00200	INSTRUCTIONS TO BIDDERS	00200-1 to 00200-8
SECTION 00410	BID FORM	00410-1 to 00410-8
SECTION 00430	BID BOND	00430-1 to 00430-2
SECTION 00437	LIST OF SUBCONTRACTORS	00437-1
SECTION 00438	PROJECT REFERENCES	00438-1
PART 2 – CONTRACT FORMS		
SECTION 00510	NOTICE OF AWARD	00510-1
SECTION 00520	CONSTRUCTION CONTRACT	00520-1 to 00520-6
SECTION 00550	NOTICE TO PROCEED	00550-1
SECTION 00610	PERFORMANCE BOND	00610-1 to 00610-2
SECTION 00615	PAYMENT BOND	00615-1 to 00615-2
PART 3 – CONDITIONS OF THE CONTRACT		
SECTION 00700	GENERAL CONDITIONS	00700-0 to 00700-43
SECTION 00800	SUPPLEMENTARY CONDITIONS OF THE CONSTRUCTION CONTRACT	00800-1 to 00800-11
SECTION 00801	SPECIAL CONDITIONS	00801-1
SECTION 00870	CERTIFICATION REGARDING DEBARMENT, SUSPENSION, NON-COLLUSION AND OTHER RESPONSIBILITY MATTERS	00870-1
SECTION 00880	CONTRACTORS CERTIFICATION STATEMENT	00880-1 to 00880-2
SECTION 00885	FEDERALLY DECLARED DISASTER FUNDS	00885-1 to 00885-5
PART 4 – SPECIFICATIONS		
DIVISION 1 – GENERAL REQUIREMENTS		
SECTION 01000	GENERAL REQUIREMENTS	01000-1 to 01000-5
SECTION 01001	ABBREVIATIONS	01001-1 to 01001-2
SECTION 01010	SUMMARY OF WORK	01010-1 to 01010-3
SECTION 01011	SITE CONDITIONS	01011-1 to 01011-4
SECTION 01014	PROTECTION OF THE ENVIRONMENT	01014-1 to 01014-2
SECTION 01016	PROTECTION OF PROPERTY	01016-1 to 01016-3
SECTION 01230	ALTERNATES	01230-1 to 01230-2
SECTION 01300	SUBMITTALS DURING CONSTRUCTION	01300-1 to 01300-10
SECTION 01310	PROJECT MANAGEMENT & COORDINATION	01310-1 to 01310-5
SECTION 01500	TEMPORARY CONSTRUCTION FACILITIES & CONTROLS	01500-1 to 01500-2
SECTION 01571	TEMPORARY SILT FENCE	01571-1
SECTION 01600	MATERIAL & EQUIPMENT SHIPMENT, HANDLING, PROTECTION & STORAGE	01600-1
SECTION 01700	CONTRACT CLOSEOUT	01700-1 to 01700-2

DIVISION 2 – SITEWORK

SECTION 02015	SITE PREPARATION	02015-1
SECTION 02050	DEMOLITION	02050-1
SECTION 02070	SELECTIVE DEMOLITION	02070-1 to 02070-2
SECTION 02110	CLEARING, GRUBBING, AND STRIPPING	02110-1 to 02110-2
SECTION 02219	EXCAVATION AND EARTHFILL	02219-1 to 02219-2

DIVISION 3 – CONCRETE

SECTION 03300	STRUCTURAL CONCRETE AND REINFORCING	03300-1 to 03300-15

DIVISION 6 – WOOD AND PLASTICS

SECTION 06135	TREATED TIMBER POLE BARN	06135-1 to 06135-5

PART 5 – DRAWINGS

SECTION 00090
ADVERTISEMENT FOR BIDS

NOTICE: Bidders

Sealed Bids will be received by the City of Waveland at 301 Coleman Avenue, Waveland, MS 39576 until 4:00 P.M., on the 5th day of, October, then opened and read at 6:30 P.M. for:

CITY OF WAVELAND
POLE BARN REPLACEMENT(S) RE-BID

The project scope consists of demolition and reconstruction of the Public Works Facility Pole Barn Re-Bid measuring 30'x and the addition of another pole barn facility measuring 30'x140'. The work is separated into two bid schedules: Bid Schedule No. 1 involves selective demolition and disposal of the existing facility measuring 30'W x 80'L and constructing a new pole barn of the same size in the same footprint (FEMA Funded); Bid Schedule No. 2 involves constructing a new pole barn measuring 30'W x 140'L at a location north of the existing pole barn at the Public Works Facility. This bid schedule will be funded by the City of Waveland and will involve excavation and grading of the existing ground and construction of the new structure. Utilities (i.e., water, sewer and electrical) are not included in this contract.

Project Manuals may be examined at the City of Waveland, 301 Coleman Avenue, Waveland, MS 39576; at the office of the Design Engineer, Compton Engineering, Inc., 3036 Longfellow Drive in Bay St. Louis; or online at www.comptonengineeringplans.com. The bid documents are being made available online via original paper copy or compact disc upon payment **$ 150.00 per paper copy** and **$50.00 per compact disc**. Full-scale drawings may be obtained (provided a set of reduced drawings and specifications has been purchased) for an additional **$ 50.00 per set.** Cost includes shipping and handling for each set. The bid documents are non-refundable and must be purchased through the website. Return of documents is not required. All planholders are required to have a valid email address for online registration. For information regarding website registration and online orders, please contact Plan House Printing at 662-407-0193. For information regarding this project, contact Compton Engineering's office at 228-467-2770 in Bay St. Louis, Mississippi.

Electronic bids can be submitted at www.comptonengineeringplans.com. For any questions relating to the electronic bidding process, please call Plan House Printing at 662-407-0193.

The right is reserved by the Owner to reject any or all bids, to waive any informalities, and to award the Contract to serve the best interest of the Owner.

City of Waveland

By: Tammy Fayard
City Clerk

Publish in the Sea Coast Echo

On August 31, 2022 and September 7, 2022

PLEASE FORWARD PROOF OF PUBLICATION AND BILL TO OWNER

SECTION 00100
INVITATION TO BID

Electronic or sealed Bids for Construction of ***"CITY OF WAVELAND, POLE BARN REPLACEMENT(S)"*** will be received at "301 Coleman Avenue, Waveland," Mississippi, until 4:00 P.M. LOCAL TIME on the 5th day of October, 2022, and then will be publicly opened and read at 6:30P.M. Any bids received after the time and date specified will not be considered and will be returned unopened.

All bids must be addressed to the CITY OF WAVELAND of WAVELAND, Mississippi; marked "SEALED BID TO BE OPENED AT 6:30 P.M., 5th DAY October, 2022", and specify the name of the bid item. If a bid is submitted by mail, the address of CITY OF WAVELAND is "301 Coleman Avenue, Waveland, MS 39576". If a bid is hand-delivered, the street address of the CITY OF WAVELAND is "301 Coleman Avenue, Waveland, MS 39576".

When bids are submitted electronically, the same requirements for submitting sealed bids shall apply. Electronic bids shall include a document representing the cover of the envelope containing the aforementioned criteria.

The project scope consists of demolition and reconstruction of the Public Works Facility Pole Barn. The work is separated into two bid schedules: Bid Schedule No. 1 involves selective demolition and disposal of the existing facility measuring 30'x x 80'L and constructing a new pole barn of the same size in the same footprint (FEMA Funded); Bid Schedule No. 2 involves constructing a new pole barn measuring 30'Wx 140'L at a location north of the existing pole barn at the Public Works Facility. This bid schedule is funded by the City of Waveland and will involve excavation and grading of the existing ground and construction of the new structure. Utilities (i.e., water, sewer and electrical) are not included in this contract.

Contract Documents may be examined at the City of Waveland, 301 Coleman Avenue, Waveland, MS, at the office of the Design Engineer, Compton Engineering, Inc., 3036 Longfellow Dr., Bay St. Louis, MS or online at www.comptonengineeringplans.com The bid documents are being made available online via original paper copy or compact disc upon payment of $150.00 per paper copy and $50.00 per compact disc. The drawings bound in the bid documents are photographic reductions of the original tracings. Cost includes shipping and handling for each set. The cost of bid documents is non-refundable and bid documents must be purchased through the website. Return of documents is not required. All plan holders are required to have a valid email address for online registration. For information regarding website registration and online orders, please contact Plan House Printing at 662-407-0193. For information regarding this project, contact Compton Engineering's office at 228-467-2770 in Bay St. Louis, MS.

Each bid must be submitted on the prescribed form and accompanied by a certified check or bid bond executed on the prescribed form, payable to the Owner in an amount not less than 5 percent of the amount bid.

The successful bidder will be required to furnish the necessary additional bond(s) for the faithful performance of the Contract, as prescribed in the Contract Documents. All performance bond, payment bond and certificates of insurance shall be either executed by or countersigned by a licensed resident agent of the surety or insurance company having his place of business in the State of Mississippi and in all ways complying with the insurance laws of the State of Mississippi. Further, the said surety or insurance company shall be duly licensed and qualified to do business in the State of Mississippi.

In order to perform public work, the successful bidder shall, as applicable, hold or obtain such Contractor's and business licenses as required by state statutes including certification of responsibility required by Section 31-3-21 to have a current certificate of responsibility issued by the State Board of Public Contractors prior to bidding on the project. The Contractor's certificate number shall appear on the exterior of the envelope, failing which, said Bid will not be opened or considered.

The project requires 100 percent Performance Bond and 100 percent Payment Bond.

Before a Contract will be awarded for the work contemplated herein, the Owner will conduct investigation as is necessary to determine the performance record and ability of the apparent lowest responsible responsive qualified bidder to perform the size and type of work specified under this Contract. Upon request, the bidder shall submit such information as deemed necessary by the Owner to evaluate the bidder's qualifications.

It is called to the attention of the Bidder that the time of completion of the work under this Contract is the essence of the Contract.

The right is reserved to reject any and all bids, and/or to reject all bids or any bid not conforming to the intent and purpose of the Contract Documents, and to postpone the award of the Contract for a period of time which, however, shall not extend beyond the days of acceptance as defined in Article 2 of the Bid Form. All applicable portions of the applicable federal law pertaining to the grant award apply to the project and procurement, including but not limited to Section 3 preference of 24 CFR 136.46 et seq. and procurement and solicitation of small minority owned businesses and women business enterprises as per regulation. By submitting a proposal, all bidders waive any right to seek delay, consequential or other losses or damage resulting from Owner not accepting the proposal or rejecting the proposal.

Dated this the 31st day of August 2022.

City of Waveland

By: Tammy Fayard
City Clerk

SECTION 00200
INSTRUCTIONS TO BIDDERS

Any singular reference to Contractor, Surety, Owner, or other party shall be considered plural where applicable.

GENERAL

The Project Manual is divided into parts, divisions and sections in keeping with accepted industry practice to separate categories of subject matter for convenient reference thereto. Generally, there has been no attempt to divide the Specification sections into Work performed by the various building trades, Work by separate subcontractors, or Work required for separate facilities in the Project.

A general description of the Work to be done is contained in Section 01010 of the Technical Specifications. The Scope is indicated on the accompanying Drawings and specified in applicable parts of these Contract Documents.

A. Where the drawings are reduced in size from the original tracings, the amount of reduction is indicated by a note and/or bar on the drawings.

ARTICLE 1 - DEFINED TERMS

1.01 Terms used in these Instructions to Bidders have the meanings indicated in the General Conditions and Supplementary Conditions. Additional terms used in these Instructions to Bidders have the meanings indicated below:

A. *Issuing Office*--The office from which the Bidding Documents may be examined and where the bidding procedures are to be administered (Compton Engineering, Inc., 3036 Longfellow Drive, Mississippi 39520).

B. *Command Type Sentences*-- Command type sentences are used in the Contract Documents. These refer to and are directed to the Contractor.

C. *Responsive Bidder*-- Any person, firm or corporation submitting a bid for the work contemplated whose bid form is complete and regular, free of exclusions special conditions or unbalanced unit prices and has no alternative bids for any item unless required in the technical specifications.

D. *Responsible Bidder*--Any person, firm or corporation submitting a bid for the work contemplated who maintains a permanent place of business, has adequate plant equipment to do the work properly and within the time limit that is established, and has adequate financial status to meet his obligations contingent to the work.

ARTICLE 2 - COPIES OF BIDDING DOCUMENTS

2.01 Complete sets of the Bidding Documents in the number and for the deposit sum, if any, stated in the Advertisement or Invitation to Bid may be obtained from the Issuing Office. The deposit is not refundable and return of the document is not required.

2.02 Complete sets of Bidding Documents shall be used in preparing Bids; neither Owner nor Engineer assumes any responsibility for errors or misinterpretations resulting from the use of incomplete sets of Bidding Documents.

2.03 Owner and Engineer, in making copies of Bidding Documents available on the above terms, do so only for the purpose of obtaining Bids for the Work and do not confer a license or grant for any other use.

ARTICLE 3 - QUALIFICATIONS OF BIDDERS

3.01 To demonstrate Bidder's qualifications to perform the Work, within five days of Owner's request, Bidder shall submit written evidence such as financial data, previous experience, present commitments, and such other data as may be requested in writing.

3.02 Bidder is advised to carefully review those portions of the Bid Form requiring Bidder's representations and certifications.

ARTICLE 4 - EXAMINATION OF BIDDING DOCUMENTS AND SITE CONDITIONS

4.01 *Subsurface and Physical Conditions*

A. The Supplementary Conditions identify:

1. Those reports known to Owner of explorations and tests of subsurface conditions at or contiguous to the Site.

2. Those drawings known to Owner of physical conditions relating to existing surface or subsurface structures at the Site (except Underground Facilities).

B. Copies of reports and drawings referenced in Paragraph 4.01.A will be made available by Owner to any Bidder on request. Those reports and drawings are not part of the Contract Documents, but the "technical data" contained therein upon which the Bidder is entitled to rely as provided in Paragraph 4.02 of the General Conditions has been identified and established in Paragraph 4.02 of the Supplementary Conditions. Bidder is responsible for any interpretation or conclusion Bidder draws from any "technical data" or any other data, interpretations, opinions, or information contained in such reports or shown or indicated in such drawings.

4.02 *Underground Facilities*

A. Information and data shown or indicated in the Bidding Documents with respect to existing Underground Facilities at or contiguous to the Site is based upon information and data furnished to Owner and Engineer by owners of such Underground Facilities, including Owner, or others.

4.03 *Hazardous Environmental Condition*

A. The Supplementary Conditions identify those reports and drawings relating to a Hazardous Environmental Condition identified at the Site, if any, that Engineer has used in preparing the Bidding Documents.

B. Copies of reports and drawings referenced in Paragraph 4.03.A will be made available by Owner to any Bidder on request. Those reports and drawings are not part of the Contract Documents, but the "technical data" contained therein upon which Bidder is entitled to rely as provided in Paragraph 4.06 of the General Conditions has been identified and established in Paragraph 4.06 of the Supplementary Conditions. Bidder is responsible for any interpretation or conclusion Bidder draws from any "technical data" or any other data, interpretations, opinions, or information contained in such reports or shown or indicated in such drawings. Bidder shall be responsible for reproduction cost of all Reports and Drawings.

4.04 Provisions concerning responsibilities for the adequacy of data furnished to prospective Bidders with respect to subsurface conditions, other physical conditions and Underground Facilities, and possible changes in the Bidding Documents due to differing or unanticipated conditions appear in Paragraphs 4.02, 4.03, and 4.04 of the General Conditions. Provisions concerning responsibilities for the adequacy of data furnished to prospective Bidders with respect to a Hazardous Environmental Condition at the Site, if any, and possible changes in the Contract Documents due to any Hazardous Environmental Condition uncovered or revealed at the Site which was not shown or indicated in the Drawings or Specifications or identified in the Contract Documents to be within the scope of the Work appear in Paragraph 4.06 of the General Conditions.

4.05 On request, Owner will provide Bidder access to the Site to conduct such examinations, investigations, explorations, tests, and studies as Bidder deems necessary for submission of a Bid. Bidder shall fill all holes and clean

up and restore the Site to its former condition upon completion of such explorations, investigations, tests, and studies. Bidder shall comply with all applicable Laws and Regulations relative to excavation and utility locates.

4.06 Reference is made to Article 7 of the Supplementary Conditions for the identification of the general nature of other work that is to be performed at the Site by Owner or others (such as utilities and other prime contractors) that relates to the Work contemplated by these Bidding Documents. On request, Owner will provide to each Bidder for examination access to or copies of Contract Documents (other than portions thereof related to price) for such other work.

4.07 It is the responsibility of each Bidder before submitting a Bid to:

A. examine and carefully study the Bidding Documents, the other related data identified in the Bidding Documents, and any Addenda;

B. visit the Site and become familiar with and satisfy Bidder as to the general, local, and Site conditions that may affect cost, progress, and performance of the Work;

C. become familiar with and satisfy Bidder as to all federal, state, and local Laws and Regulations that may affect cost, progress, and performance of the Work;

D. obtain and carefully study (or accept consequences of not doing so) all examinations, investigations, explorations, tests, studies, and data concerning conditions (surface, subsurface, and Underground Facilities) at or contiguous to the Site which may affect cost, progress, or performance of the Work or which relate to any aspect of the means, methods, techniques, sequences, and procedures of construction to be employed by Bidder, including applying any specific means, methods, techniques, sequences, and procedures of construction expressly required by the Bidding Documents, and safety precautions and programs incident thereto;

E. consider the information known to the Bidder; information commonly known to contractors doing business in the locality of the Site; information and observations obtained from visits to the Site; the Bidding Documents; and the Site-related reports and drawings identified in the Bidding Documents, with respect to the effect of such information, observations, and documents on (1) the cost, progress, and performance of the Work; (2) the means, methods, techniques, sequences, and procedures of construction to be employed by Bidder, including applying any specific means, methods, techniques, sequences, and procedures of construction expressly required by the bidding Documents; and (3) Bidder's safety precautions and programs;

F agree at the time of submitting its Bid that no further examinations, investigations, explorations, tests, studies, or data are necessary for the determination of its Bid for performance of the Work at the price(s) bid and within the times and in accordance with the other terms and conditions of the Bidding Documents;

G. become aware of the general nature of the work to be performed by Owner and others at the Site that relates to the Work as indicated in the Bidding Documents;

H. correlate the information known to Bidder, information and observations obtained from visits to the Site, reports and drawings identified in the Bidding Documents, and all additional examinations, investigations, explorations, tests, studies, and data with the Bidding Documents;

I. promptly give Engineer written notice of all conflicts, errors, ambiguities, or discrepancies that Bidder discovers in the Bidding Documents and confirm that the written resolution thereof by Engineer is acceptable to Bidder; and

J. determine that the Bidding Documents are generally sufficient to indicate and convey understanding of all terms and conditions for the performance of the Work.

4.08 The submission of a Bid will constitute an incontrovertible representation by Bidder that Bidder has complied with every requirement of this Article 4, that without exception the Bid is premised upon performing and furnishing the Work required by the Bidding Documents and applying any specific means, methods, techniques, sequences, and procedures of construction that may be shown or indicated or expressly required by the Bidding Documents, that Bidder has given Engineer written notice of all conflicts, errors, ambiguities, and discrepancies that Bidder has

discovered in the Bidding Documents and the written resolutions thereof by Engineer are acceptable to Bidder, and that the Bidding Documents are generally sufficient to indicate and convey understanding of all terms and conditions for performing and furnishing the Work.

ARTICLE 5 - PRE-BID CONFERENCE

5.01 A Pre-Bid Conference has not been scheduled. If required, a pre-bid conference will be scheduled by addendum.

ARTICLE 6 - SITE AND OTHER AREAS

6.01 The Site is identified in the Bidding Documents. Easements for permanent structures or permanent changes in existing facilities are to be obtained and paid for by Owner unless otherwise provided in the Bidding Documents. All additional lands and access thereto required for temporary construction facilities, construction equipment, or storage of materials and equipment to be incorporated in the Work are to be obtained and paid for by Contractor.

ARTICLE 7 - INTERPRETATIONS AND ADDENDA

7.01 All questions about the meaning or intent of the Bidding Documents are to be submitted to Engineer in writing. Interpretations or clarifications considered necessary by Engineer in response to such questions will be issued by Addenda mailed or delivered to all parties recorded by Engineer as having received the Bidding Documents. Questions received less than ten days prior to the date for opening of Bids may not be answered. Only questions answered by Addenda will be binding. Oral and other interpretations or clarifications will be without legal effect.

7.02 Addenda may be issued to clarify, correct, or change the Bidding Documents as deemed advisable by Owner or Engineer.

ARTICLE 8 - BID SECURITY

8.01 A Bid must be accompanied by Bid security made payable to Owner in an amount of 5% percent of Bidder's maximum Bid price and in the form of a certified check or bank money order or a Bid bond (on the form attached) issued by a surety meeting the requirements of Paragraphs 5.01 and 5.02 of the General Conditions.

8.02 The Bid security of the Successful Bidder will be retained until such Bidder has executed the Contract Documents, furnished the required contract security and met the other conditions of the Notice of Award, whereupon the Bid security will be returned. If the Successful Bidder fails to execute and deliver the Contract Documents and furnish the required contract security within 10 days after the Notice of Award, Owner may consider Bidder in default, annul the Notice of Award and the Bid security of that Bidder will be forfeited. Such forfeiture shall be Owner's exclusive remedy if Bidder defaults. The Bid security of other Bidders whom Owner believes to have a reasonable chance of receiving the award may be retained by Owner until the earlier of seven days after the Effective Date of the Agreement or 91 days after the Bid opening, whereupon Bid security furnished by such Bidders will be returned.

8.03 Bid security of other Bidders whom Owner believes do not have a reasonable chance of receiving the award will be returned within fourteen days after the Bid opening.

ARTICLE 9 – CONTRACT TIMES

9.01 The number of days within which the Work is to be substantially completed and ready for final payment is set forth in the Bid Form.

ARTICLE 10 – LIQUIDATED DAMAGES

10.01 Provisions for liquidated damages, if any, are set forth in the Contract. **Bidders acknowledge that this is a federally funded project with shortened timeline for reimbursement. Owner reserves the right to seek actual losses and damage resulting delay, including but not limited to any loss of funding, in additional to or instead of the liquidated damage penalty stated.**

ARTICLE 11 - SUBSTITUTE AND "OR-EQUAL" ITEMS

11.01 The Contract, if awarded, will be on the basis of materials and equipment specified or described in the Bidding Documents. Whenever it is specified or described in the Bidding Documents that a substitute or "or-equal" item of material or equipment may be furnished or used by Contractor if acceptable to Engineer, provision for providing the substitutes will be included in the Bid.

ARTICLE 12 - SUBCONTRACTORS, SUPPLIERS, AND OTHERS

12.01 If the Supplementary Conditions require the identity of certain Subcontractors, Suppliers, individuals, or entities to be submitted to Owner in advance of a specified date prior to the Effective Date of the Agreement, the apparent Successful Bidder, and any other Bidder so requested, shall within five days after Bid opening, submit to Owner a list of all such Subcontractors, Suppliers, individuals, or entities proposed for those portions of the Work for which such identification is required. Such list shall be accompanied by an experience statement with pertinent information regarding similar projects and other evidence of qualification for each such Subcontractor, Supplier, individual, or entity if requested by Owner. If Owner or Engineer, after due investigation, has reasonable objection to any proposed Subcontractor, Supplier, individual, or entity, Owner may, before the Notice of Award is given, request apparent Successful Bidder to submit a substitute in which case apparent Successful Bidder shall submit an acceptable substitute, Bidder's Bid price will be increased (or decreased) by the difference in cost occasioned by such substitution, and Owner may consider such price adjustment in evaluating Bids and making the Contract award.

12.02 If apparent Successful Bidder declines to make any such substitution, Owner may award the Contract to the next lowest Bidder that proposes to use acceptable Subcontractors, Suppliers, individuals, or entities. Declining to make requested substitutions will not constitute grounds for forfeiture of the Bid security of any Bidder. Any Subcontractor, Supplier, individual, or entity so listed and against which Owner or Engineer makes no written objection prior to the giving of the Notice of Award will be deemed acceptable to Owner and Engineer subject to revocation of such acceptance after the Effective Date of the Agreement as provided in Paragraph 6.06 of the General Conditions.

12.03 Contractor shall not be required to employ any Subcontractor, Supplier, individual, or entity against whom Contractor has reasonable objection.

12.04 Alternate designs for the requested pole barns will be considered that meet the current codes. As the bid documents require engineered stamped shop drawings to be submitted for review, bidders have the latitude to submit alternate designs, while still meeting the local building requirements and the intent of the bid documents. Design parameters have not changed and must remain at the eave height and center to center spacing of the columns as presented in the bid documents.

ARTICLE 13 - PREPARATION OF BID

13.01 The Bid Form is included with the Bidding Documents.

13.02 All blanks on the Bid Form shall be completed by printing in ink or by typewriter and the Bid signed in ink. Erasures or alterations shall be initialed in ink by the person signing the Bid Form. A Bid price shall be indicated for each section, Bid item, alternative, and unit price item listed therein. In the case of optional alternatives, the words "No Bid," "No Change," or "Not Applicable" may be entered.

13.03 A Bid by a corporation shall be executed in the corporate name by the president or a vice-president or other corporate officer accompanied by evidence of authority to sign. The corporate seal shall be affixed and attested by the secretary or an assistant secretary. The corporate address and state of incorporation shall be shown.

13.04 A Bid by a partnership shall be executed in the partnership name and signed by a partner (whose title must appear under the signature), accompanied by evidence of authority to sign. The official address of the partnership shall be shown.

13.05 A Bid by a limited liability company shall be executed in the name of the firm by a member and accompanied by evidence of authority to sign. The state of formation of the firm and the official address of the firm shall be shown.

13.06 A Bid by an individual shall show the Bidder's name and official address.

13.07 A Bid by a joint venture shall be executed by each joint venturer in the manner indicated on the Bid Form. The official address of the joint venture shall be shown.

13.08 All names shall be typed or printed in ink below the signatures.

13.09 The Bid shall contain an acknowledgment of receipt of all Addenda, the numbers of which shall be filled in on the Bid Form.

13.10 Postal and e-mail addresses and telephone number for communications regarding the Bid shall be shown.

13.11 The Bid shall contain evidence of Bidder's authority and qualification to do business in the state where the Project is located. Bidder's state contractor license number, if any, shall also be shown on the Bid Form.

13.12 **Effective May 1, 2012, all bids for public works projects utilizing funds received from a federally declared disaster or a spill of national significance shall be subject to the hiring policies established by Miss. Code Ann. § 31-5-37. This Project does utilize funds received from a federally declared disaster.**

ARTICLE 14 - BASIS OF BID; COMPARISON OF BIDS

14.01 *Lump Sum*

A. Where prices are requested to be submitted as a lump sum, Bidders shall submit a Bid on a lump sum basis as set forth in the Bid Form. Where alternates are included, the Bidder shall submit prices per each alternate. Owner may select any combination of Base Bids and alternates in order to determine the lowest and best bid.

14.02 *Unit Price*

A. Bidders shall submit a Bid on a unit price basis for each item of Work listed in the Bid schedule.

B. The total of all estimated prices will be the sum of the products of the estimated quantity of each item and the corresponding unit price. The final quantities and Contract Price will be determined in accordance with Paragraph 11.03 of the General Conditions.

C. Discrepancies between the multiplication of units of Work and unit prices will be resolved in favor of the unit prices. Discrepancies between the indicated sum of any column of figures and the correct sum thereof will be resolved in favor of the correct sum. Discrepancies between words and figures will be resolved in favor of the words.

D. The Owner reserves the right to increase or decrease the amount of any class of unit price work that may be deemed necessary. No minimum or maximum quantity for any bid item is guaranteed by the Owner.

14.03 For cash allowances the Bid price shall include such amounts as the Bidder deems proper for Contractor's overhead, costs, profit, and other expenses on account of cash allowances, if any, named in the Contract Documents, in accordance with Paragraph 11.02.B of the General Conditions.

14.04 If Contractor is to bid the time of completion, Bid prices will be compared after adjusting for differences in the time designated by Bidders for Substantial Completion. The adjusting amount will be determined at the rate set forth in the Contract Documents for liquidated damages for failing to achieve Substantial Completion for each day before or after the desired date appearing in Article 9.

ARTICLE 15 - SUBMITTAL OF BID

15.01 With each copy of the Bidding Documents, a Bidder is furnished one separate unbound copy of the Bid Form, and, if required, the Bid Bond Form. The unbound copy of the Bid Form is to be completed and submitted with the Bid security and the following data:

15.02 A Bid shall be submitted no later than the date and time prescribed and at the place indicated in the Advertisement or Invitation to Bid and shall be enclosed in a sealed package plainly marked with the Project title (and, if applicable, the designated portion of the Project for which the Bid is submitted), the name and address of Bidder, and shall be accompanied by the Bid security and other required documents. If a Bid is sent by mail or other delivery system, the sealed envelope containing the Bid shall be enclosed in a separate envelope plainly marked on the outside with the notation "BID ENCLOSED." A mailed Bid shall be addressed as indicated in the Notice to Bidders and/or Invitation to Bid.

15.03 Non-Resident Bidders ("Preference Statue" Miss. Code Ann. § 31-3-21(3))

A. Effective July 1, 2010, all bids submitted by a non-resident contractor which does not include the non-resident contractor's current state law shall be rejected and not considered for award. If the state does not have a preference law, then the contractor shall submit a letter stating such from an officer of the court.

15.04 When Bids are submitted electronically, the same requirements under Article 15.01 through 15.03 shall apply.

ARTICLE 16 - MODIFICATION AND WITHDRAWAL OF BID

16.01 A Bid may be modified or withdrawn by an appropriate document duly executed in the manner that a Bid must be executed and delivered to the place where Bids are to be submitted prior to the date and time for the opening of Bids.

16.02 If within 24 hours after Bids are opened, any Bidder files a duly signed written notice with Owner and promptly thereafter demonstrates to the reasonable satisfaction of Owner that there was a material and substantial mistake in the preparation of its Bid, that Bidder may withdraw its Bid, and the Bid security will be returned. Thereafter, if the Work is re-bid, that Bidder will be disqualified from further bidding on the Work.

ARTICLE 17 - OPENING OF BIDS

17.01 Bids will be opened at the time and place indicated in the Advertisement or Invitation to Bid and, unless obviously non-responsive, read aloud publicly. An abstract of the amounts of the base Bids and major alternates, if any, will be made available to Bidders after the opening of Bids.

ARTICLE 18 - BIDS TO REMAIN SUBJECT TO ACCEPTANCE

18.01 All Bids will remain subject to acceptance for the period of time stated in the Bid Form, but Owner may, in its sole discretion, release any Bid and return the Bid security prior to the end of this period.

ARTICLE 19 – EVALUATION OF BIDS AND AWARD OF CONTRACT

19.01 Owner reserves the right to reject any or all Bids, including without limitation, nonconforming, nonresponsive, unbalanced, or conditional Bids. Owner further reserves the right to reject the Bid of any Bidder whom it finds, after reasonable inquiry and evaluation, to not be responsible. Owner may also reject the Bid of any Bidder if Owner believes that it would not be in the best interest of the Project to make an award to that Bidder. Owner also reserves the right to waive all informalities not involving price, time, or changes in the Work and to negotiate contract terms with the Successful Bidder.

19.02 More than one Bid for the same Work from an individual or entity under the same or different names will not be considered. Reasonable grounds for believing that any Bidder has an interest in more than one Bid for the Work may be cause for disqualification of that Bidder and the rejection of all Bids in which that Bidder has an interest.

19.03 In evaluating Bids, Owner will consider whether or not the Bids comply with the prescribed requirements, and such alternates, unit prices and other data, as may be requested in the Bid Form prior to the Notice of Award.

19.04 In evaluating Bidders, Owner will consider the qualifications of Bidders and may consider the qualifications and experience of Subcontractors, Suppliers, and other individuals or entities proposed for those portions of the Work for which the identity of Subcontractors, Suppliers, and other individuals or entities must be submitted as provided in the Supplementary Conditions.

19.05 Owner may conduct such investigations as Owner deems necessary to establish the responsibility, qualifications, and financial ability of Bidders, proposed Subcontractors, Suppliers, individuals, or entities to perform the Work in accordance with the Contract Documents.

19.06 If the Contract is to be awarded, Owner will award the Contract to the Bidder whose Bid is in the best interests of the Project.

ARTICLE 20 - CONTRACT SECURITY AND INSURANCE

20.01 Article 5 of the General Conditions, as may be modified by the Supplementary Conditions, sets forth Owner's requirements as to performance and payment bonds and insurance. When the Successful Bidder delivers the executed Agreement to Owner, it shall be accompanied by such bonds.

ARTICLE 21 - SIGNING OF AGREEMENT

21.01 When Owner gives a Notice of Award to the Successful Bidder, it shall be accompanied by the required number of unsigned counterparts of the Agreement with the other Contract Documents which are identified in the Agreement as attached thereto. Within 10 days thereafter, Successful Bidder shall sign and deliver the required number of counterparts of the Agreement and attached documents to Owner. Within ten days thereafter, Owner shall deliver one fully signed counterpart to Successful Bidder with a complete set of the Drawings with appropriate identification.

ARTICLE 22 - SALES AND USE TAXES

22.01 The Contractor may be subject to a Contractor's Tax in the state where the project is located. If applicable, all Contractor's taxes shall be included in the Bid.

ARTICLE 23 - RETAINAGE

23.01 Provisions concerning Contractor's rights to deposit securities in lieu of retainage are set forth in the Agreement.

ARTICLE 24 – CONTRACTS TO BE ASSIGNED

Not included.

ARTICLE 25 - PARTNERING

Not included.

ARTICLE 26- FEDERALLY DECLARED DISASTER FUNDS

26.01 All public works projects utilizing funds received by state or local governmental entities resulting from a federally declared disaster or a spill of national significance, including damages, penalties, fines or supplemental projects paid or financed by responsible parties pursuant to a court order, negotiated settlement, or other instrument, including under any law distributing such fines and penalties including the federal Resources and Ecosystems Sustainability, Tourist Opportunities and Revived Economy of the Gulf Coast Act of 2011 (R.E.S.T.O.R.E), the Oil Pollution Act of 1990 or the Federal Water Pollution Control Act or similar legislation, shall be subject to the hiring policies established by Miss. Code Ann § 31-5-37.

SECTION 00410

BID FORM

NOTE: Use preferably black ink for completing this Bid form.

ARTICLE 1 – BID RECIPIENT

1.01 This Bid is submitted for:

City of Waveland
Public Works Facility
Pole Barn Replacement(s) Re-Bid

1.02 This Bid is submitted to:

City of Waveland
301 Coleman Ave.
Waveland, MS 39576

1.03 The undersigned Bidder proposes and agrees, if this Bid is accepted, to enter into an Agreement with Owner in the form included in the Bidding Documents to perform all Work as specified or indicated in the Bidding Documents for the prices and within the times indicated in this Bid and in accordance with the other terms and conditions of the Bidding Documents.

1.04 The person to contact for additional information regarding this Bid:

NAME: TIM MILES
TITLE: PROJECT MANAGER / V. PRES
TELEPHONE: 228-366-7205

ARTICLE 2 – BIDDER'S ACKNOWLEDGEMENTS

2.01 Bidder accepts all of the terms and conditions of the Instructions to Bidders, including without limitation those dealing with the disposition of Bid security. This Bid will remain subject to acceptance for 120 days after the Bid opening, or for such longer period of time that Bidder may agree to in writing upon request of Owner.

ARTICLE 3 – BIDDER'S REPRESENTATIONS

3.01 In submitting this Bid, Bidder represents that:

A. Bidder has examined and carefully studied the Bidding Documents, the other related data identified in the Bidding Documents, and the following Addenda, receipt of which is hereby acknowledged.

Addendum No.	Addendum Date

B. Bidder has visited the Site and become familiar with and is satisfied as to the general, local and Site conditions that may affect cost, progress, and performance of the Work.

C. Bidder is familiar with and is satisfied as to all federal, state and local Laws and Regulations that may affect cost, progress and performance of the Work.

D. Bidder has carefully studied all: (1) reports of explorations and tests of subsurface conditions at or

contiguous to the Site and all drawings of physical conditions relating to existing surface or subsurface structures at the Site (except Underground Facilities) that have been identified in SC-4.02 as containing reliable "technical data" and, (2) reports and drawings of Hazardous Environmental Conditions, if any, at the site that have been identified in SC-4.06 as containing reliable "technical data".

E. Bidder has considered the information known to Bidder; information commonly known to contractors doing business in the locality of the Site; information and observations obtained from visits to the Site; the Bidding Documents; and the Site-related reports and drawings identified in the Bidding Documents, with respect to the effect of such information, observations, and documents on (1) the cost, progress, and performance of the Work; (2) the means, methods, techniques, sequences, and procedures of construction to be employed by Bidder, including applying the specific means, methods, techniques, sequences, and procedures of construction expressly required by the Bidding Documents; and (3) Bidder's safety precautions and programs.

F. Based on the information and observations referred to in Paragraph 3.01.E above, Bidder does not consider that further examinations, investigations, explorations, tests, studies, or data are necessary for the determination of this Bid for performance of the Work at the price(s) bid and within the times required, and in accordance with the other terms and conditions of the Bidding Documents.

G. Bidder is aware of the general nature of work to be performed by Owner and others at the Site that relates to the Work as indicated in the Bidding Documents.

H. Bidder has given Engineer written notice of all conflicts, errors, ambiguities, or discrepancies that Bidder has discovered in the Bidding Documents, and the written resolution thereof by Engineer is acceptable to Bidder.

I. The Bidding Documents are generally sufficient to indicate and convey understanding of all terms and conditions for the performance of the Work for which this Bid is submitted.

ARTICLE 4 – FURTHER REPRESENTATIONS

4.01 Bidder further represents that:

A. This Bid is genuine and not made in the interest of or on behalf of any undisclosed individual or entity and is not submitted in conformity with any collusive agreement or rules of any group, association, organization or corporation;

B. Bidder has not directly or indirectly induced or solicited any other Bidder to submit a false or sham Bid;

C. Bidder has not solicited or induced any individual or entity to refrain from bidding; and

D. Bidder has not engaged in corrupt, fraudulent, collusive, or coercive practices in competing for the Contract. For the purposes of this Paragraph 4.01.D:

1. "corrupt practice" means the offering, giving, receiving, or soliciting of any thing of value likely to influence the action of a public official in the bidding process;

2. "fraudulent practice" means an intentional misrepresentation of facts made (a) to influence the bidding process to the detriment of Owner, (b) to establish bid prices at artificial non-competitive levels, or (c) to deprive Owner of the benefits of free and open competition;

3. "collusive practice" means a scheme or arrangement between two or more Bidders, with or without the knowledge of Owner, a purpose of which is to establish bid prices at artificial, non-competitive levels; and

4. "coercive practice" means harming or threatening to harm, directly or indirectly, persons or their property to influence their participation in the bidding process or affect the execution of the Contract.

ARTICLE 5 – BASIS OF BID

5.01 Bidder will complete the Work in accordance with the Contract Documents for the following price(s):

BASE BID - BID SCHEDULE NO. 1					
FEMA ELIGIBLE – POLE BARN FACILITY					
Item No.	Item Description	Qty	Unit	Unit Cost	Item Cost
1	Mobilization/Demobilization	1	LS	12,000.00	12,000.00
2	Demolition	1	LS	7,000.00	7,000.00
3	Provide and Construct one (1) Treated Timber Pole Barn – 30'Wx80'L – 14' Eave Height	1	LS	38000.00	38,000.00
TOTAL BASE BID– BID SCHEDULE NO. 1					57,000.00

BID SCHEDULE NO. 2					
NON-FEMA PARTICIPATING – POLE BARN FACILITY					
Item No.	Item Description	Qty	Unit	Unit Cost	Item Cost
1	Clearing and Grubbing, and Stripping	1	LS	3,000.00	3,000.00
2	Unclassified Excavation (FM)	430	CY	10.00	4300.00
3	Borrow Excavation (FM)	450	CY	20.00	9,000.00
4	Provide and Construct one (1) Treated Timber Pole Barn – 30'Wx140'L – 14' Eave Height	1	LS	60,000.00	60000.00
TOTAL ALTERNATE BID - BID SCHEDULE NO. 2:					76,300.00

Unit Prices have been computed in accordance with Paragraph 11.03.B of the General Conditions.

Bidder acknowledges that estimated quantities are not guaranteed, and are solely for the purpose of comparison of Bids, and final payment for all Unit Price Bid items will be based on actual quantities, determined as provided in the Contract Documents.

ARTICLE 6 – TIME OF COMPLETION

6.01 Bidder agrees that the Work will be substantially complete within 120 calendar days after the date when the Contract Times commence to run as provided in Paragraph 2.03 of the General Conditions, and will be completed and ready for final payment in accordance with Paragraph 14.07 of the General Conditions within 150 calendar days after the date when the Contract Times commence to run.

6.02 Bidder accepts the provisions of the Contract as to liquidated damages.

ARTICLE 7 – ATTACHMENTS TO THIS BID

7.01 The following documents are attached to and made a condition of this Bid:

A. Required Bid security in the form of Bid Bond, Section 00430.
B. Miss. Code Annotated § 31-5-37.
C. Certified Employment Plan Form.
D. Agreement of Compliance.

ARTICLE 8 – DEFINED TERMS

8.01 The terms used in this Bid with initial capital letters have the meanings stated in the Instructions to Bidders, the General Conditions, and the Supplementary Conditions.

ARTICLE 9 – BIDDER'S SIGNATURE AND SWORN STATEMENT

STATE OF MISSISSIPPI

COUNTY OF JACKSON

BIDDER

9.01 The name of the bidder submitting this proposal is:

COASTAL DEVELOPMENT & CONSTRUCTION, LLC

Headquarters Address: 2010 OLD MOBILE HWY
Street

PASCAGOULA, MS. 39567
City State Zip

228-366-7205
Phone Fax

timgt1234@aol.com
Email

Local Mailing Address (if different than above):

Street

City State Zip

Address to which all communications concerned with this Bid and with the resulting Contract shall be sent:

COASTAL DEVELOPMENT & CONSTRUCTION 2010 OLD MOBILE HWY
Name Street or P.O. Box

PASCAGOULA MS 39567
City State Zip

Attention: TIM MILES V. PRES.
Name Title

Submitted on OCT 5, 20 22.

State Contractor License No. 22083-MC. (If applicable)

9.02 Bidder is:

An Individual

Name (typed or printed): _____

By: _____ (SEAL)
(Individual's signature)

Doing business as: _____

A Partnership

Partnership Name: _____ (SEAL)

By: _____
(Signature of general partner – attach evidence of authority to sign)

First Partner Name (typed or printed): _____

Address: _____

Second Partner Name (typed or printed: _____

Address: _____

A Corporation

Corporation Name: COASTAL DEVELOPMENT & CONSTRUCTION LLC (SEAL)

State of Incorporation: MS

Type (General Business, Professional, Service, Limited Liability): LLC

By: Jackie Grimes
(Signature – attach evidence of authority to sign)

Name (typed or printed): JACKIE GRIMES

Title: MANAGING MEMBER
(CORPORATE SEAL)

Attest: Faith Taylor Sec-Tres
(Signature of Corporate Secretary)

Date of Qualification to do business in MS *[State Where Project is Located]* is 12/29/16.

A Joint Venture

Name of Joint Venturer: _____

First Joint Venturer Name: _____ (SEAL)

By: _____
(Signature of first joint venture partner – attach evidence of authority to sign)

Name (typed or printed): _____

Title: _____

Second Joint Venturer Name: _____ (SEAL)

By: _____
(Signature of second joint venture partner – attach evidence of authority to sign)

Name (typed or printed): _____

Title: _____

(Each joint venturer must sign. The manner of signing for each individual, partnership, and corporation that is a party to the joint venture should be in the manner indicated above.)

9.02 I (Bidder) have examined and prepared the foregoing Bid(s) based on the information contained in the Project Manual provided with the Bid; that I have checked the same in detail before submitting this Bid; that I have full authority to make such statements and submit this Bid in (its) (their) (my) behalf; and that these statements are true and correct.

Signature: Rachel Grimes

Title: MANAGING MEMBER (Corporate Seal)

NOTARY PUBLIC:

Subscribe and sworn to before me this 5th day of OCT, 2022

Notary Public – State of Mississippi.

My Commission expires March 26, 2026 (Notary Seal)

SECTION 00430
BID BOND

Any singular reference to Bidder, Surety, Owner, or other party shall be considered plural where applicable.

BIDDER (Name and Address):
Coastal Development & Construction, LLC
2010 Old Mobile Highway
Pascagoula, MS 39567

SURETY (Name and Address of Principal Place of Business):
Old Republic Surety Company
P. O. Box 1635
Milwaukee, WI 53201

OWNER (Name and Address):

City of Waveland
301 Coleman Ave.
Waveland, MS 39576

BID
Bid Due Date: October 5, 2022
Project (Brief Description Including Location):

PUBLIC WORKS FACILITY

POLE BARN REPLACEMENT(S) RE-BID

BOND
Bond Number: N/A
Date (Not later than Bid due date): October 5, 2022
Penal sum Five Percent (5%) of the Amount Bid---------- 5%
(Words) (Figures)

Surety and Bidder, intending to be legally bound hereby, subject to the terms printed on the reverse side hereof, do each cause this Bid Bond to be duly executed on its behalf by its authorized officer, agent, or representative.

BIDDER	SURETY
Coastal Development & Construction, LLC (Seal)	Old Republic Surety Company (Seal)
Bidder's Name and Corporate Seal	Surety's Name and Corporate Seal
By: Jackie Grimes Managing Member	By: Kathleen B. Scarborough
Signature and Title	Kathleen B. Scarborough Signature and Title Attorney-In-Fact/ MS Resident Agent (Attach Power of Attorney)
Attest: Faith Taylor, Office Manager	Attest: Darlene Landry
Signature and Title	Signature and Title Darlene Landry, Witness

Note: Above addresses are to be used for giving required notice.

1. Bidder and Surety, jointly and severally, bind themselves, their heirs, executors, administrators, successors and assigns to pay to Owner upon default of Bidder the penal sum set forth on the face of this Bond. Payment of the penal sum is the extent of Surety's liability. Recovery of such penal sum under the terms of this Bond shall be the Owner's sole and exclusive remedy upon default of Bidder.

2. Default of Bidder shall occur upon the failure of Bidder to deliver within the time required by the Bidding Documents (or any extension thereof agreed to in writing by Owner) the executed Agreement required by the Bidding Documents and any performance and payment bonds required by the Bidding Documents.

3. This obligation shall be null and void if:

3.1. Owner accepts Bidder's Bid and Bidder delivers within the time required by the Bidding Documents (or any extension thereof agreed to in writing by Owner) the executed Agreement required by the Bidding Documents and any performance and payment bonds required by the Bidding Documents, or

3.2. All Bids are rejected by Owner, or

3.3. Owner fails to issue a Notice of Award to Bidder within the time specified in the Bidding Documents (or any extension thereof agreed to in writing by Bidder and, if applicable, consented to by Surety when required by Paragraph 5 hereof).

4. Payment under this Bond will be due and payable upon default by Bidder and within 30 calendar days after receipt by Bidder and Surety of written notice of default from Owner, which notice will be given with reasonable promptness, identifying this Bond and the Project and including a statement of the amount due.

5. Surety waives notice of any and all defenses based on or arising out of any time extension to issue Notice of Award agreed to in writing by Owner and Bidder, provided that the total time for issuing Notice of Award including extensions shall not in the aggregate exceed 120 days from Bid due date without Surety's written consent.

6. No suit or action shall be commenced under this Bond prior to 30 calendar days after the notice of default required in Paragraph 4 above is received by Bidder and Surety and in no case later than one year after Bid due date.

7. Any suit or action under this Bond shall be commenced only in a court of competent jurisdiction located in the state in which the Project is located.

8. Notices required hereunder shall be in writing and sent to Bidder and Surety at their respective addresses shown on the face of this Bond. Such notices may be sent by personal delivery, commercial courier, or by United States Registered or Certified Mail, return receipt requested, postage pre-paid, and shall be deemed to be effective upon receipt by the party concerned.

9. Surety shall cause to be attached to this Bond a current and effective Power of Attorney evidencing the authority of the officer, agent, or representative who executed this Bond on behalf of Surety to execute, seal, and deliver such Bond and bind the Surety thereby.

10. This Bond is intended to conform to all applicable statutory requirements. Any applicable requirement of any applicable statute that has been omitted from this Bond shall be deemed to be included herein as if set forth at length. If any provision of this Bond conflicts with any applicable statute, then the provision of said statute shall govern and the remainder of this Bond that is not in conflict therewith shall continue in full force and effect.

11. The term "Bid" as used herein includes a Bid, offer, or proposal as applicable.

OLD REPUBLIC SURETY COMPANY

POWER OF ATTORNEY

KNOW ALL MEN BY THESE PRESENTS: That OLD REPUBLIC SURETY COMPANY, a Wisconsin stock insurance corporation, does make, constitute and appoint: TROY WAGENER, JIM E. BRASHIER, TEB JONES, DAVID FORTENBERRY, MARY NORVAL, KIM BARNUM, KATHLEEN B SCARBOROUGH, DEWEY B. MASON, SUSAN M SKRMETTA, JOSEPH R BEATTIE, LISA R. BUTLER, PATRICK T. MASON, CHRIS BOONE, SHARON TUTEN, CHARLOTTE A. RAMSEY, LESSIE RYAN ANDERSON, DEBBIE DUNAWAY, JAMES ELEY BRASHIER

of GULFPORT, MS

its true and lawful Attorney(s)-in-Fact, with full power and authority for and on behalf of the company as surety, to execute and deliver and affix the seal of the company thereto (if a seal is required), bonds, undertakings, recognizances or other written obligations in the nature thereof, ***(other than bail bonds, bank depository bonds, mortgage deficiency bonds, mortgage guaranty bonds, guarantees of installment paper and note guaranty bonds, self-insurance workers compensation bonds guaranteeing payment of benefits, or black lung bonds),*** as follows:

ALL WRITTEN INSTRUMENTS

and to bind OLD REPUBLIC SURETY COMPANY thereby, and all of the acts of said Attorneys-In-Fact, pursuant to these presents, are ratified and confirmed. This appointment is made under and by authority of the board of directors at a special meeting held on February 18, 1982.

This Power of Attorney is signed and sealed by facsimile under and by the authority of the following resolutions adopted by the board of directors of the OLD REPUBLIC SURETY COMPANY on February 18,1982.

RESOLVED that, the president, any vice-president or assistant vice president, in conjunction with the secretary or any assistant secretary, may appoint attorneys-in-fact or agents with authority as defined or limited in the instrument evidencing the appointment in each case, for and on behalf of the company to execute and deliver and affix the seal of the company to bonds, undertakings, recognizances, and suretyship obligations of all kinds; and said officers may remove any such attorney-in-fact or agent and revoke any Power of Attorney previously granted to such person.

RESOLVED FURTHER, that any bond, undertaking, recognizance, or suretyship obligation shall be valid and binding upon the Company

(i) when signed by the president, any vice president or assistant vice president, and attested and sealed (if a seal be required) by any secretary or assistant secretary; or

(ii) when signed by the president, any vice president or assistant vice president, secretary or assistant secretary, and countersigned and sealed (if a seal be required) by a duly authorized attorney-in-fact or agent; or

(iii) when duly executed and sealed (if a seal be required) by one or more attorneys-in-fact or agents pursuant to and within the limits of the authority evidenced by the Power of Attorney issued by the company to such person or persons.

RESOLVED FURTHER that the signature of any authorized officer and the seal of the company may be affixed by facsimile to any Power of Attorney or certification thereof authorizing the execution and delivery of any bond, undertaking, recognizance, or other suretyship obligations of the company; and such signature and seal when so used shall have the same force and effect as though manually affixed.

IN WITNESS WHEREOF, OLD REPUBLIC SURETY COMPANY has caused these presents to be signed by its proper officer, and its corporate seal to be affixed this 26th day of January, 2021.

OLD REPUBLIC SURETY COMPANY

Karen J. Haffner
Assistant Secretary

Alan Pavlic
President

STATE OF WISCONSIN, COUNTY OF WAUKESHA - SS

On this 26th day of January, 2021, personally came before me, Alan Pavlic and Karen J Haffner, to me known to be the individuals and officers of the OLD REPUBLIC SURETY COMPANY who executed the above instrument, and they each acknowledged the execution of the same, and being by me duly sworn, did severally depose and say: that they are the said officers of the corporation aforesaid, and that the seal affixed to the above instrument is the seal of the corporation, and that said corporate seal and their signatures as such officers were duly affixed and subscribed to the said instrument by the authority of the board of directors of said corporation.

Kathryn R. Pearson
Notary Public

My Commission Expires: September 28, 2022
(Expiration of notary's commission does not invalidate this instrument

CERTIFICATE

I, the undersigned, assistant secretary of the OLD REPUBLIC SURETY COMPANY, a Wisconsin corporation, CERTIFY that the foregoing and attached Power of Attorney remains in full force and has not been revoked; and furthermore, that the Resolutions of the board of directors set forth in the Power of Attorney, are now in force.

87-0829

Signed and sealed at the City of Brookfield, WI this 5th day of October, 2022.

Karen J. Haffner
Assistant Secretary

ORSC 22262 (3-08)

COASTAL DEVELOPMENT CONSTRUCTION

2010 OLD MOBILE HWY
PASCAGOULA, MISSISSIPPI 39567
228.282.2149 OFFICE

October 4, 2022

Jackie Grimes is the sole Member and Managing Member of Coastal Development & Construction, a Limited Liability Company organized under the laws of the State of Mississippi and authorizes himself to submit bid proposals and execute agreements on behalf of this Limited Liability Company.

I, Jackie G Grimes, hereby certify that I am the only Member and Managing Member of Coastal Development & Construction a Limited Liability Company created under the laws of the State of Mississippi domiciled in Pascagoula, MS; and the foregoing is a true statement.

Jackie Grimes, Managing Member

SECTION 00437
LIST OF SUBCONTRACTORS

The Contractor shall list Subcontractors, Suppliers, individuals, or entities to be utilized on the Work. The name of the company or individual, the address, the item(s) of Work to be subcontracted, and the value of Work subcontracted shall be provided below. List the Subcontractors Certificate of Responsibility Number if the value of Work is equal to or greater than $50,000.

NAME: _____
ADDRESS _____
ITEM(S) OF WORK: _____
VALUE OF WORK: _____
CERTIFICATE OF RESPONSIBILITY NUMBER: _____

NAME: _____
ADDRESS: _____
ITEM(S) OF WORK: _____
VALUE OF WORK: _____
CERTIFICATE OF RESPONSIBILITY NUMBER: _____

NAME: _____
ADDRESS: _____
ITEM(S) OF WORK: _____
VALUE OF WORK: _____
CERTIFICATE OF RESPONSIBILITY NUMBER: _____

NAME: _____
ADDRESS: _____
ITEM(S) OF WORK: _____
VALUE OF WORK: _____
CERTIFICATE OF RESPONSIBILITY NUMBER: _____

NAME: _____
ADDRESS: _____
ITEM(S) OF WORK: _____
VALUE OF WORK: _____
CERTIFICATE OF RESPONSIBILITY NUMBER: _____

NAME: _____
ADDRESS: _____
ITEM(S) OF WORK: _____
VALUE OF WORK: _____
CERTIFICATE OF RESPONSIBILITY NUMBER: _____

NAME: _____
ADDRESS: _____
ITEM(S) OF WORK: _____
VALUE OF WORK: _____
CERTIFICATE OF RESPONSIBILITY NUMBER: _____

The person to contact for additional information regarding this form:

_____ _____
(Name) *(Title)*

Note: Should additional space be necessary to list all Subcontractors, bidder shall submit multiple copies of this form.

SECTION 00438

PROJECT REFERENCES

The Contractor shall provide a list of five (5) similar projects that you have completed, with the contract amount, references, and contact information for each (preferably other than Compton Engineering projects).

Project #1: CLARK SEAFOOD
Location: GRD. BAY AL. **Contract Amount:** $1.5 M
Owner: HORN PARTNERSHIP LLC.
Contact: JIM HORN **Phone No.:** 228-219-1517
Engineer: KEATH BUMPERS
Contact: _____ **Phone No.:** _____

Project #2: CHEROKEE FOREST INFRASTRUCTURE IMPROVEMENTS
Location: PASCAGOULA **Contract Amount:** $2.6 M
Owner: CITY OF PASCAGOULA
Contact: _____ **Phone No.:** _____
Engineer: BROWN MITCHELL & ALEXANDER
Contact: BEN SMITH **Phone No.:** _____

Project #3: RIVERFRONT REDEVELOPMENT
Location: PASCAGOULA **Contract Amount:** $1.5M
Owner: CITY OF PASCAGOULA
Contact: _____ **Phone No.:** _____
Engineer: COMPTON ENGINEERING
Contact: _____ **Phone No.:** _____

Project #4: _____
Location: _____ **Contract Amount:** _____
Owner: _____
Contact: _____ **Phone No.:** _____
Engineer: _____
Contact: _____ **Phone No.:** _____

Project #5: _____
Location: _____ **Contract Amount:** _____
Owner: _____
Contact: _____ **Phone No.:** _____
Engineer: _____
Contact: _____ **Phone No.:** _____

SECTION 00510
NOTICE OF AWARD

Dated: October 20, 2022

Project: Public Works Facility Pole Barn Replacement(s) Re-Bid	Owner: City of Waveland	Contract No.:
Contract: Public Works Facility Pole Barn Replacement(s) Re-Bid		Engineer's Project No.: 221-019.006

Bidder:
Coastal Development Construction
Bidder's Address: (send Certified Mail, Return Receipt Requested)
2010 Old Mobile Hwy
Pascagoula, MS 39567

You are notified that your Bid dated October 5, 2022, for the above Contract has been considered. You are the Successful Bidder and are awarded a Contract for:

Public Works Facility Pole Barn Replacement(s) Re-Bid

The Contract Price of your Contract is

One Hundred Thirty-Three Thousand, Three Hundred Dollars and 00/100 ($133,300.00)

Three (3) copies of each of the proposed Contract Documents accompany this Notice of Award.

You must comply with the following conditions precedent within ten (10) days of the date you receive this Notice of Award.

1. Deliver to the Owner three (3) fully executed counterparts of the Contract Documents.

2. Deliver with the executed Contract Documents the Contract security bonds and certificates of insurance, three (3) fully executed originals as specified in the Instructions to Bidders (Article 20), General Conditions (Paragraph 5.01), and Supplementary Conditions (Paragraph SC-5.03).

Failure to comply with these conditions within the time specified will entitle Owner to consider you in default, annul this Notice of Award and declare your Bid security forfeited.

Within ten days after you comply with the above conditions, Owner will return to you one fully executed counterpart of the Contract Documents.

City of Waveland, Owner

By: Robert A. Fischer
Authorized Signature

Engineer
Title

ACCEPTANCE OF NOTICE

Receipt of the above Notice of Award is hereby acknowledged by Coastal Development Construction this the 25th day of OCTOBER, 2022.

By: Jackie Skinner

Title: MANG MEMBER / PRES.

Copy to Engineer

SECTION 00520
CONTRACT

THIS AGREEMENT is by and between **The City of Waveland, 301 Coleman Avenue, Waveland, MS**

(Owner) and **Coastal Development Construction, 2010 Old Mobile Hwy, Pascagoula, MS 39567**

(Contractor).

Owner and Contractor, in consideration of the mutual covenants set forth herein, agree as follows:

ARTICLE 1 - WORK

1.01 Contractor shall complete all Work as specified or indicated in the Contract Documents. The Work is generally described as follows:

The project scope consists of demolition and reconstruction of the Public Works Facility Pole Barn. The work is separated into two bid schedules: Bid Schedule No. 1 involves selective demolition and disposal of the existing facility measuring 30'x x 80'L and constructing a new pole barn of the same size in the same footprint (FEMA Funded); Bid Schedule No. 2 involves constructing a new pole barn measuring 30'Wx 140'L at a location north of the existing pole barn at the Public Works Facility. This bid schedule is funded by the City of Waveland and will involve excavation and grading of the existing ground and construction of the new structure. Utilities (i.e., water, sewer and electrical) are not included in this contract.

ARTICLE 2 - THE PROJECT

2.01 The Project for which the Work under the Contract Documents may be the whole or only a part is generally described as follows:

City of Waveland
Public Works Facility
Pole Barn Replacement(s) Re-Bid

ARTICLE 3 - ENGINEER

3.01 The Project has been designed by:

Compton Engineering, Inc.
3036 Longfellow Dr.
Bay St. Louis, MS 39520

(Engineer), who is to act as Owner's representative, assume all duties and responsibilities, and have the rights and authority assigned to Engineer in the Contract Documents in connection with the completion of the Work in accordance with the Contract Documents.

ARTICLE 4 - CONTRACT TIMES

4.01 Time of the Essence

A. All time limits for Milestones, if any, Substantial Completion, and completion and readiness for final payment as stated in the Contract Documents are of the essence of the Contract.

4.02 Days to Achieve Substantial Completion and Final Payment

A. The Work will be substantially completed within 120 days after the date when the Contract Times commence to run as provided in Paragraph 2.03 of the General Conditions, and completed and ready for final payment in accordance with Paragraph 14.07 of the General Conditions within 150 days after the date when the Contract Times commence to run.

4.03 Liquidated Damages

A. Contractor and Owner recognize that time is of the essence of this Agreement and that Owner will suffer financial loss if the Work is not completed within the times specified in Paragraph 4.02 above, plus any extensions thereof allowed in accordance with Article 12 of the General Conditions. The parties also recognize the delays, expense, and difficulties involved in proving in a legal or arbitration proceeding the actual loss suffered by Owner if the Work is not completed on time. Accordingly, instead of requiring any such proof, Owner and Contractor agree that as liquidated damages for delay (but not as a penalty), Contractor shall pay Owner $ 250.00 for each day that expires after the time specified in Paragraph 4.02 for Substantial Completion until the Work is substantially complete. After Substantial Completion, if Contractor shall neglect, refuse, or fail to complete the remaining Work within the Contract Time or any proper extension thereof granted by Owner, Contractor shall pay Owner $ 250.00 for each day that expires after the time specified in Paragraph 4.02 for completion and readiness for final payment until the Work is completed and ready for final payment. Contractor recognizes that this is a grant funded project, and Owner reserves the right at its unilateral option to recover actual losses or damages from delay, including but not limited to loss of grant funding.

ARTICLE 5 - CONTRACT PRICE

5.01 Owner shall pay Contractor for completion of the Work in accordance with the Contract Documents an amount in current funds equal to the sum of the amounts determined below:

Bid Schedule No. 1: Fifty-Seven Thousand, Dollars 00/100 ($57,000.00)

Bid Schedule No. 2: Seventy-Six Thousand, Three Hundred Dollars, 00/100 ($76,300.00)

Total Bid: One Hundred Thirty-Three Thousand, Three Hundred, Dollars 00/100 ($133,300.00)

A. For all Work, at the prices stated in Contractor's Bid, attached hereto as an exhibit.

As provided in Paragraph 11.03 of the General Conditions, estimated quantities are not guaranteed, and determinations of actual quantities and classifications are to be made by Engineer as provided in Paragraph 9.07 of the General Conditions. Unit prices have been computed as provided in Paragraph 11.03 of the General Conditions.

ARTICLE 6 - PAYMENT PROCEDURES

6.01 Submittal and Processing of Payments

A. Contractor shall submit Applications for Payment in accordance with Article 14 of the General Conditions. Applications for Payment will be processed by Engineer as provided in the General Conditions. Contractor shall be in compliance with all terms and conditions of the grant documents and contract at the time of invoice submission.

6.02 Progress Payments; Retainage

A. Owner shall make progress payments on account of the Contract Price on the basis of Contractor's Applications for Payment in accordance with Article 14 of the General Conditions during performance of the Work as provided in Paragraphs 6.02.A.1 and 6.02.A.2 below. All such payments will be measured by the schedule of values established as provided in Paragraph 2.07.A of the General Conditions (and in the case of Unit Price Work based on the number of units completed) or, in the event there is no schedule of values, as provided in the General Requirements.

1. Prior to Substantial Completion, progress payments will be made in an amount equal to the percentage indicated below but, in each case, less the aggregate of payments previously made and less such amounts as Engineer may determine or Owner may withhold, including but not limited to liquidated damages, in accordance with Paragraph 14.02 of the General Conditions:

a. 95 percent of Work completed (with the balance being retainage); and

b. 95 percent of cost of materials and equipment not incorporated in the Work (with the balance being retainage).

2. Upon Substantial Completion, Owner shall pay an amount sufficient to increase total payments to Contractor to 95 percent of the Work completed, less such amounts as Engineer shall determine in accordance with Paragraph 14.02.B.5 of the General Conditions and less 95 percent of Engineer's estimate of the value of Work to be completed or corrected as shown on the tentative list of items to be completed or corrected attached to the certificate of Substantial Completion.

6.03 Final Payment

A. Upon final completion and acceptance of the Work in accordance with Paragraph 14.07 of the General Conditions, Owner shall pay the remainder of the Contract Price as recommended by Engineer as provided in said Paragraph 14.07.

ARTICLE 7 - INTEREST

7.01 All moneys not paid when due as provided in Article 14 of the General Conditions shall bear interest at the rate specified by Mississippi State Law.

ARTICLE 8 – CONTRACTOR'S REPRESENTATIONS

8.01 In order to induce Owner to enter into this Agreement Contractor makes the following representations:

A. Contractor has examined and carefully studied the Contract Documents and the other related data identified in the Bidding Documents.

B. Contractor has visited the Site and become familiar with and is satisfied as to the general, local, and Site conditions that may affect cost, progress, and performance of the Work.

C. Contractor is familiar with and is satisfied as to all federal, state, and local Laws and Regulations that may affect cost, progress, and performance of the Work.

D. Contractor has carefully studied all: (1) reports of explorations and tests of subsurface conditions at or contiguous to the Site and all drawings of physical conditions relating to existing surface or subsurface structures at the Site (except Underground Facilities), if any, that have been identified in Paragraph SC-4.02 of the Supplementary Conditions as containing reliable "technical data," and (2) reports and drawings of Hazardous Environmental Conditions, if any, at the Site that have been identified in Paragraph SC-4.06 of the Supplementary Conditions as containing reliable "technical data."

E. Contractor has considered the information known to Contractor; information commonly known to contractors doing business in the locality of the site; information and observations obtained from visits to the Site; the Contract Documents; and the Site-related reports and drawings identified in the Contract Documents, with respect to the effect of such information, observations, and documents on (1) the cost, progress, and performance of the Work; (2) the means, methods, techniques, sequences, and procedures of construction to be employed by Contractor, including any specific means, methods, techniques, sequences, and procedures of construction expressly required by the Contract Documents; and (3) Contractor's safety precautions and programs.

F. Based on the information and observations referred to in Paragraph 8.01.E above, Contractor does not consider that further examinations, investigations, explorations, tests, studies, or data are necessary for the performance of the Work at the Contract Price, within the Contract Times, and in accordance with the other terms and conditions of the Contract Documents.

G. Contractor is aware of the general nature of work to be performed by Owner and others at the Site that relates to the Work as indicated in the Contract Documents.

H. Contractor has given Engineer written notice of all conflicts, errors, ambiguities, or discrepancies that Contractor has discovered in the Contract Documents, and the written resolution thereof by Engineer is acceptable to Contractor.

I. The Contract Documents are generally sufficient to indicate and convey understanding of all terms and conditions for performance and furnishing of the Work.

ARTICLE 9 - CONTRACT DOCUMENTS

9.01 Contents

A. The Contract Documents consist of the following:

1. This Agreement (pages 1 to 6, inclusive).

2. Performance bond (pages 1 to 2, inclusive).

3. Payment bond (pages 1 to 2, inclusive).

4. Other bonds (pages X to X, inclusive).

a. _____ (pages _____ to _____, inclusive).

b. _____ (pages _____ to _____, inclusive).

c. _____ (pages _____ to _____, inclusive).

5. General Conditions (pages 0 to 46, inclusive).

6. Supplementary Conditions (pages 1 to 11, inclusive).

7. Specifications as listed in the table of contents of the Project Manual.

8. The Drawings listed on the sheet index included in or with the Project Manual.

9. Addenda (numbers 1 to 3, inclusive).

10. Exhibits to this Agreement (enumerated as follows):

a. Contractor's Bid (pages 1 to 8, inclusive).

b. Documentation submitted by Contractor prior to Notice of Award (pages X to X, inclusive).

c. _____.

11. The following which may be delivered or issued on or after the Effective Date of the Agreement and are not attached hereto:

a. Notice to Proceed (pages 1 to 1, inclusive).

b. Work Change Directives.

c. Change Order(s).

12. Certification Regarding Debarment, Suspension, Non-Collusion and Other Responsibility Matters as required by the Project Manager (page 1 only)

13. Miss. Code § 31-5-37, Agreement of Compliance and Certified Employment Plan Form

B. The documents listed in Paragraph 9.01.A are attached to this Agreement (except as expressly noted otherwise above).

C. There are no Contract Documents other than those listed above in this Article 9.

D. The Contract Documents may only be amended, modified, or supplemented as provided in Paragraph 3.04 of the General Conditions.

ARTICLE 10 - MISCELLANEOUS

10.01 Terms

A. Terms used in this Agreement will have the meanings stated in the General Conditions and the Supplementary Conditions.

10.02 Assignment of Contract

A. No assignment by a party hereto of any rights under or interests in the Contract will be binding on another party hereto without the written consent of the party sought to be bound; and, specifically but without limitation, moneys that may become due and moneys that are due may not be assigned without such consent (except to the extent that the effect of this restriction may be limited by law), and unless specifically stated to the contrary in any written consent to an assignment, no assignment will release or discharge the assignor from any duty or responsibility under the Contract Documents.

10.03 Successors and Assigns

A. Owner and Contractor each binds itself, its partners, successors, assigns, and legal representatives to the other party hereto, its partners, successors, assigns, and legal representatives in respect to all covenants, agreements, and obligations contained in the Contract Documents.

10.04 Severability

A. Any provision or part of the Contract Documents held to be void or unenforceable under any Law or Regulation shall be deemed stricken, and all remaining provisions shall continue to be valid and binding upon Owner and Contractor, who agree that the Contract Documents shall be reformed to replace such stricken provision or part thereof with a valid and enforceable provision that comes as close as possible to expressing the intention of the stricken provision.

10.05 Contractor's Certifications

A. Contractor certifies that it has not engaged in corrupt, fraudulent, collusive, or coercive practices in competing for or in executing the Contract. For the purposes of this Paragraph 10.05:

1. "corrupt practice" means the offering, giving, receiving, or soliciting of anything of value likely to influence the action of a public official in the bidding process or in the Contract execution;

2. "fraudulent practice" means an intentional misrepresentation of facts made (a) to influence the bidding process or the execution of the Contract to the detriment of Owner, (b) to establish Bid or Contract prices at artificial non-competitive levels, or (c) to deprive Owner of the benefits of free and open competition;

3. "collusive practice" means a scheme or arrangement between two or more Bidders, with or without the knowledge of Owner, a purpose of which is to establish Bid prices at artificial, non-competitive levels; and

4. "coercive practice" means harming or threatening to harm, directly or indirectly, persons or their property to influence their participation in the bidding process or affect the execution of the Contract.

10.06 Other Provisions: N/A

IN WITNESS WHEREOF, Owner and Contractor have signed this Agreement in duplicate. One counterpart each has been delivered to Owner and Contractor. All portions of the Contract Documents have been signed or identified by Owner and Contractor or on their behalf.

This Agreement will be effective on November 7, , 2022 (which is the Effective Date of the Agreement).

OWNER:

City of Waveland

By: Mike Smith

Title: Mayor

[CORPORATE SEAL]

Attest: Jay H Lo

Title: City Clerk

Address for giving notices:

(If Owner is a corporation, attach evidence of authority to sign. If Owner is a public body, attach evidence of authority to sign and resolution or other documents authorizing execution of Owner-Contractor Agreement.)

CONTRACTOR:

Jackie Grimes

By: JACKIE GRIMES

Title: MANG. MEMBER / PRES.

[CORPORATE SEAL]

Attest: Darin Dayle

Title: OFFICE MANG / SEC-TRES

Address for giving notices:

COASTAL DEVELOPMENT & CONSTRUCTION
2010 OLD MOBILE HWY
PASCAGOULA, MS. 39567

License No.: 22083 - MC
(Where applicable)

Agent for service or process:

(If Contractor is a corporation or a partnership, attach evidence of authority to sign.)

SECTION 00610
PERFORMANCE BOND

Any singular reference to Contractor, Surety, Owner, or other party shall be considered plural where applicable.

CONTRACTOR (Name and Address):
Coastal Development & Construction, LLC
2010 Old Mobile Highway
Pascagoula, MS 39567

SURETY (Name and Address of Principal Place of Business):
Old Republic Surety Company
P. O. Box 1635
Milwaukee, WI 53201

OWNER (Name and Address): *City of Waveland*
301 Coleman Ave.
Waveland, MS 39576

CONTRACT
Date:
Amount: $133,300.00
Description (Name and Location):

PUBLIC WORKS FACILITY
POLE BARN REPLACEMENT(S) RE-BID

BOND
Bond Number: 7313955
Date (Not earlier than Contract Date):
Amount: $133,300.00
Modifications to this Bond Form: None

Surety and Contractor, intending to be legally bound hereby, subject to the terms printed on the reverse side hereof, do each cause this Performance Bond to be duly executed on its behalf by its authorized officer, agent, or representative.

CONTRACTOR AS PRINCIPAL
Company: Coastal Development & Construction, LLC

Signature: Jackie Grimes (Seal)
Name and Title: JACKIE GRIMES managing member/Pres

SURETY

Old Republic Surety Company (Seal)
Surety's Name and Corporate Seal

By: Kathleen B. Scarborough
Signature and Title Kathleen B. Scarborough, Attorney-In-Fact, MS Resident Agent
(Attach Power of Attorney)

Attest: Darlene Landry
Signature and Title Darlene Landry, Witness

(Space is provided below for signatures of additional parties, if required.)

CONTRACTOR AS PRINCIPAL
Company:

Signature: _____ (Seal)
Name and Title:

SURETY

_____ (Seal)
Surety's Name and Corporate Seal

By: _____
Signature and Title
(Attach Power of Attorney)

Attest: _____
Signature and Title:

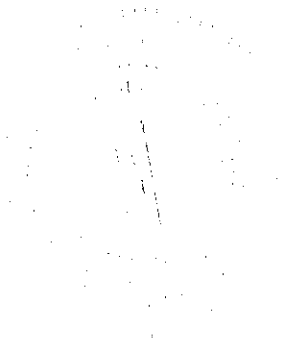

1. Contractor and Surety, jointly and severally, bind themselves, their heirs, executors, administrators, successors, and assigns to Owner for the performance of the Contract, which is incorporated herein by reference.

2. If Contractor performs the Contract, Surety and Contractor have no obligation under this Bond, except to participate in conferences as provided in Paragraph 3.1.

3. If there is no Owner Default, Surety's obligation under this Bond shall arise after:

3.1. Owner has notified Contractor and Surety, at the addresses described in Paragraph 10 below, that Owner is considering declaring a Contractor Default and has requested and attempted to arrange a conference with Contractor and Surety to be held not later than 15 days after receipt of such notice to discuss methods of performing the Contract. If Owner, Contractor and Surety agree, Contractor shall be allowed a reasonable time to perform the Contract, but such an agreement shall not waive Owner's right, if any, subsequently to declare a Contractor Default; and

3.2. Owner has declared a Contractor Default and formally terminated Contractor's right to complete the Contract. Such Contractor Default shall not be declared earlier than 20 days after Contractor and Surety have received notice as provided in Paragraph 3.1; and

3.3. Owner has agreed to pay the Balance of the Contract Price to:

1. Surety in accordance with the terms of the Contract;

2. Another contractor selected pursuant to Paragraph 4.3 to perform the Contract.

4. When Owner has satisfied the conditions of Paragraph 3, Surety shall promptly and at Surety's expense take one of the following actions:

4.1. Arrange for Contractor, with consent of Owner, to perform and complete the Contract; or

4.2. Undertake to perform and complete the Contract itself, through its agents or through independent contractors; or

4.3. Obtain bids or negotiated proposals from qualified contractors acceptable to Owner for a contract for performance and completion of the Contract, arrange for a contract to be prepared for execution by Owner and Contractor selected with Owner's concurrence, to be secured with performance and payment bonds executed by a qualified surety equivalent to the bonds issued on the Contract, and pay to Owner the amount of damages as described in Paragraph 6 in excess of the Balance of the Contract Price incurred by Owner resulting from Contractor Default; or

4.4. Waive its right to perform and complete, arrange for completion, or obtain a new contractor and with reasonable promptness under the circumstances:

1. After investigation, determine the amount for which it may be liable to Owner and, as soon as practicable after the amount is determined, tender payment therefor to Owner; or

2. Deny liability in whole or in part and notify Owner citing reasons therefor.

5. If Surety does not proceed as provided in Paragraph 4 with reasonable promptness, Surety shall be deemed to be in default on this Bond 15 days after receipt of an additional written notice from Owner to Surety demanding that Surety perform its obligations under this Bond, and Owner shall be entitled to enforce any remedy available to Owner. If Surety proceeds as provided in Paragraph 4.4, and Owner refuses the payment tendered or Surety has denied liability, in whole or in part, without further notice Owner shall be entitled to enforce any remedy available to Owner.

6. After Owner has terminated Contractor's right to complete the Contract, and if Surety elects to act under Paragraph 4.1, 4.2, or 4.3 above, then the responsibilities of Surety to Owner shall not be greater than those of Contractor under the Contract, and the responsibilities of Owner to Surety shall not be greater than those of Owner under the Contract. To a limit of the amount of this Bond, but subject to commitment by Owner of the Balance of the Contract Price to mitigation of costs and damages on the Contract, Surety is obligated without duplication for:

6.1. The responsibilities of Contractor for correction of defective Work and completion of the Contract;

6.2. Additional legal, design professional, and delay costs resulting from Contractor's Default, and resulting from the actions or failure to act of Surety under Paragraph 4; and

6.3. Liquidated damages, or if no liquidated damages are specified in the Contract, actual damages caused by delayed performance or non-performance of Contractor.

7. Surety shall not be liable to Owner or others for obligations of Contractor that are unrelated to the Contract, and the Balance of the Contract Price shall not be reduced or set off on account of any such unrelated obligations. No right of action shall accrue on this Bond to any person or entity other than Owner or its heirs, executors, administrators, or successors.

8. Surety hereby waives notice of any change, including changes of time, to Contract or to related subcontracts, purchase orders, and other obligations.

9. Any proceeding, legal or equitable, under this Bond may be instituted in any court of competent jurisdiction in the location in which the Work or part of the Work is located and shall be instituted within two years after Contractor Default or within two years after Contractor ceased working or within two years after Surety refuses or fails to perform its obligations under this Bond, whichever occurs first. If the provisions of this paragraph are void or prohibited by law, the minimum period of limitation available to sureties as a defense in the jurisdiction of the suit shall be applicable.

10. Notice to Surety, Owner, or Contractor shall be mailed or delivered to the address shown on the signature page.

11. When this Bond has been furnished to comply with a statutory requirement in the location where the Contract was to be performed, any provision in this Bond conflicting with said statutory requirement shall be deemed deleted herefrom and provisions conforming to such statutory requirement shall be deemed incorporated herein. The intent is that this Bond shall be construed as a statutory bond and not as a common law bond.

12. Definitions.

12.1 Balance of the Contract Price: The total amount payable by Owner to Contractor under the Contract after all proper adjustments have been made, including allowance to Contractor of any amounts received or to be received by Owner in settlement of insurance or other Claims for damages to which Contractor is entitled, reduced by all valid and proper payments made to or on behalf of Contractor under the Contract.

12.2. Contract: The agreement between Owner and Contractor identified on the signature page, including all Contract Documents and changes thereto.

12.3. Contractor Default: Failure of Contractor, which has neither been remedied nor waived, to perform or otherwise to comply with the terms of the Contract.

12.4. Owner Default: Failure of Owner, which has neither been remedied nor waived, to pay Contractor as required by the Contract or to perform and complete or comply with the other terms thereof.

FOR INFORMATION ONLY – Name, Address and Telephone
Surety Agency or Broker Cadence Insurance, 760 Howard Avenue, 2nd Floor, Biloxi, MS 39530
Owner's Representative (engineer or other party) Compton Engineering, Inc., 3036 Longfellow Drive, Bay St. Louis, MS 39520

SECTION 00615
PAYMENT BOND

Any singular reference to Contractor, Surety, Owner, or other party shall be considered plural where applicable.

CONTRACTOR (Name and Address):
Coastal Development & Construction, LLC
2010 Old Mobile Highway
Pascagoula, MS 39567

SURETY (Name and Address of Principal Place of Business):
Old Republic Surety Company
P. O. Box 1635
Milwaukee, WI 53201

OWNER (Name and Address): *City of Waveland*
301 Coleman Ave.
Waveland, MS 39576

CONTRACT
Date:
Amount: $133,300.00
Description (Name and Location):

PUBLIC WORKS FACILITY
POLE BARN REPLACEMENT(S) RE-BID

BOND
Bond Number: 7313955
Date (Not earlier than Contract Date):
Amount: $133,300.00
Modifications to this Bond Form: None

Surety and Contractor, intending to be legally bound hereby, subject to the terms printed on the reverse side hereof, do each cause this Payment Bond to be duly executed on its behalf by its authorized officer, agent, or representative.

CONTRACTOR AS PRINCIPAL
Company: Coastal Development & Construction, LLC

Signature: Jackie Grimes (Seal)
Name and Title: Jackie Grimes, managing member/Pres

SURETY

Old Republic Surety Company (Seal)
Surety's Name and Corporate Seal

By: Kathleen B. Scarborough
Signature and Title Kathleen B. Scarborough, Attorney-In-Fact, MS Resident Agent
(Attach Power of Attorney)

Attest: Darlene Landry
Signature and Title Darlene Landry, Witness

(Space is provided below for signatures of additional parties, if required.)

CONTRACTOR AS PRINCIPAL
Company:

Signature: _____ (Seal)
Name and Title:

SURETY

_____ (Seal)
Surety's Name and Corporate Seal

By: _____
Signature and Title
(Attach Power of Attorney)

Attest: _____
Signature and Title:

OLD REPUBLIC SURETY COMPANY

POWER OF ATTORNEY

KNOW ALL MEN BY THESE PRESENTS: That OLD REPUBLIC SURETY COMPANY, a Wisconsin stock insurance corporation, does make, constitute and appoint: TROY WAGENER, JIM E. BRASHIER, TEB JONES, DAVID FORTENBERRY, MARY NORVAL, KIM BARHUM, KATHLEEN B. SCARBOROUGH, DEWEY B. MASON, SUSAN M. SKRMETTA, JOSEPH R. BEATTIE, LISA R. BUTLER, PATRICK T. MASON, CHRIS BOONE, SHARON TUTEN, CHARLOTTE A. RAMSEY, LESSIE R. ANDERSON, DEBBIE DUNAWAY, JAMES ELEY BRASHIER of GULFPORT, MS

its true and lawful Attorney(s)-in-Fact, with full power and authority for and on behalf of the company as surety, to execute and deliver and affix the seal of the company thereto (if a seal is required), bonds, undertakings, recognizances or other written obligations in the nature thereof, ***(other than bail bonds, bank depository bonds, mortgage deficiency bonds, mortgage guaranty bonds, guarantees of installment paper and note guaranty bonds, self-insurance workers compensation bonds guaranteeing payment of benefits, or black lung bonds),*** as follows:

ALL WRITTEN INSTRUMENTS

and to bind OLD REPUBLIC SURETY COMPANY thereby, and all of the acts of said Attorneys-in-Fact, pursuant to these presents, are ratified and confirmed. This appointment is made under and by authority of the board of directors at a special meeting held on February 18, 1982.

This Power of Attorney is signed and sealed by facsimile under and by the authority of the following resolutions adopted by the board of directors of the OLD REPUBLIC SURETY COMPANY on February 18,1982.

RESOLVED that, the president, any vice-president or assistant vice president, in conjunction with the secretary or any assistant secretary, may appoint attorneys-in-fact or agents with authority as defined or limited in the instrument evidencing the appointment in each case, for and on behalf of the company to execute and deliver and affix the seal of the company to bonds, undertakings, recognizances, and suretyship obligations of all kinds; and said officers may remove any such attorney-in-fact or agent and revoke any Power of Attorney previously granted to such person.

RESOLVED FURTHER, that any bond, undertaking, recognizance, or suretyship obligation shall be valid and binding upon the Company

(i) when signed by the president, any vice president or assistant vice president, and attested and sealed (if a seal be required) by any secretary or assistant secretary; or

(ii) when signed by the president, any vice president or assistant vice president, secretary or assistant secretary, and countersigned and sealed (if a seal be required) by a duly authorized attorney-in-fact or agent; or

(iii) when duly executed and sealed (if a seal be required) by one or more attorneys-in-fact or agents pursuant to and within the limits of the authority evidenced by the Power of Attorney issued by the company to such person or persons.

RESOLVED FURTHER that the signature of any authorized officer and the seal of the company may be affixed by facsimile to any Power of Attorney or certification thereof authorizing the execution and delivery of any bond, undertaking, recognizance, or other suretyship obligations of the company; and such signature and seal when so used shall have the same force and effect as though manually affixed.

IN WITNESS WHEREOF, OLD REPUBLIC SURETY COMPANY has caused these presents to be signed by its proper officer, and its corporate seal to be affixed this 16th day of September, 2022.

OLD REPUBLIC SURETY COMPANY

Karen J. Haffner
Assistant Secretary

OLD REPUBLIC SURETY COMPANY CORPORATE SEAL 1981

Alan Pavlic
President

STATE OF WISCONSIN, COUNTY OF WAUKESHA - SS

On this 16th day of September, 2022, personally came before me, Alan Pavlic and Karen J Haffner, to me known to be the individuals and officers of the OLD REPUBLIC SURETY COMPANY who executed the above instrument, and they each acknowledged the execution of the same, and being by me duly sworn, did severally depose and say: that they are the said officers of the corporation aforesaid, and that the seal affixed to the above instrument is the seal of the corporation, and that said corporate seal and their signatures as such officers were duly affixed and subscribed to the said instrument by the authority of the board of directors of said corporation.

KATHRYN R. PEARSON NOTARY PUBLIC STATE OF WISCONSIN

Kathryn R. Pearson
Notary Public

My Commission Expires: September 28, 2026

(Expiration of notary's commission does not invalidate this instrument)

CERTIFICATE

I, the undersigned, assistant secretary of the OLD REPUBLIC SURETY COMPANY, a Wisconsin corporation, CERTIFY that the foregoing and attached Power of Attorney remains in full force and has not been revoked; and furthermore, that the Resolutions of the board of directors set forth in the Power of Attorney, are now in force.

87-0829

OLD REPUBLIC SURETY COMPANY CORPORATE SEAL 1981

Signed and sealed at the City of Brookfield, WI this _____ day of _____, _____.

Karen J. Haffner
Assistant Secretary

ORSC 22262 (3-06)

BXS INSURANCE, INC.

COASTAL DEVELOPMENT & CONSTRUCTION

2010 OLD MOBILE HWY
PASCAGOULA, MISSISSIPPI 39567
228.282.2149 OFFICE

October 27, 2022

Jackie Grimes is the sole Member and Managing Member of Coastal Development & Construction, a Limited Liability Company organized under the laws of the State of Mississippi and authorizes himself to submit bid proposals and execute agreements on behalf of this Limited Liability Company.

I, Jackie G Grimes, hereby certify that I am the only Member and Managing Member of Coastal Development & Construction a Limited Liability Company created under the laws of the State of Mississippi domiciled in Pascagoula, MS; and the foregoing is a true statement.

Jackie Grimes, Managing Member

CERTIFICATE OF LIABILITY INSURANCE

DATE (MM/DD/YYYY): 10/27/2022

THIS CERTIFICATE IS ISSUED AS A MATTER OF INFORMATION ONLY AND CONFERS NO RIGHTS UPON THE CERTIFICATE HOLDER. THIS CERTIFICATE DOES NOT AFFIRMATIVELY OR NEGATIVELY AMEND, EXTEND OR ALTER THE COVERAGE AFFORDED BY THE POLICIES BELOW. THIS CERTIFICATE OF INSURANCE DOES NOT CONSTITUTE A CONTRACT BETWEEN THE ISSUING INSURER(S), AUTHORIZED REPRESENTATIVE OR PRODUCER, AND THE CERTIFICATE HOLDER.

IMPORTANT: If the certificate holder is an ADDITIONAL INSURED, the policy(ies) must have ADDITIONAL INSURED provisions or be endorsed. If SUBROGATION IS WAIVED, subject to the terms and conditions of the policy, certain policies may require an endorsement. A statement on this certificate does not confer rights to the certificate holder in lieu of such endorsement(s).

PRODUCER Pyron Coastal Insurance 1703 Old Mobile Ave Pascagoula MS 39567	**CONTACT NAME:** Cynthia Collins **PHONE (A/C, No, Ext):** (228) 762-0557 **FAX (A/C, No):** (228) 205-4932 **E-MAIL ADDRESS:** cindy@pyroncoastal.com
INSURED Coastal Development & Construction, LLC 2010 Old Mobile Ave Pascagoula MS 39567	**INSURER(S) AFFORDING COVERAGE** — **NAIC #** **INSURER A:** State Auto Mutual Insurance — 25135 **INSURER B:** **INSURER C:** **INSURER D:** **INSURER E:** **INSURER F:**

COVERAGES **CERTIFICATE NUMBER:** CL22102709983 **REVISION NUMBER:**

THIS IS TO CERTIFY THAT THE POLICIES OF INSURANCE LISTED BELOW HAVE BEEN ISSUED TO THE INSURED NAMED ABOVE FOR THE POLICY PERIOD INDICATED. NOTWITHSTANDING ANY REQUIREMENT, TERM OR CONDITION OF ANY CONTRACT OR OTHER DOCUMENT WITH RESPECT TO WHICH THIS CERTIFICATE MAY BE ISSUED OR MAY PERTAIN, THE INSURANCE AFFORDED BY THE POLICIES DESCRIBED HEREIN IS SUBJECT TO ALL THE TERMS, EXCLUSIONS AND CONDITIONS OF SUCH POLICIES. LIMITS SHOWN MAY HAVE BEEN REDUCED BY PAID CLAIMS.

INSR LTR	TYPE OF INSURANCE	ADDL INSD	SUBR WVD	POLICY NUMBER	POLICY EFF (MM/DD/YYYY)	POLICY EXP (MM/DD/YYYY)	LIMITS	
	COMMERCIAL GENERAL LIABILITY						EACH OCCURRENCE	$
	☐ CLAIMS-MADE ☐ OCCUR						DAMAGE TO RENTED PREMISES (Ea occurrence)	$
							MED EXP (Any one person)	$
							PERSONAL & ADV INJURY	$
	GEN'L AGGREGATE LIMIT APPLIES PER:						GENERAL AGGREGATE	$
	☐ POLICY ☐ PRO-JECT ☐ LOC						PRODUCTS - COMP/OP AGG	$
	OTHER:							$
A	AUTOMOBILE LIABILITY						COMBINED SINGLE LIMIT (Ea accident)	$ 1,000,000
	☒ ANY AUTO						BODILY INJURY (Per person)	$
	☐ OWNED AUTOS ONLY ☐ SCHEDULED AUTOS	Y		10009077CA	11/15/2022	11/15/2023	BODILY INJURY (Per accident)	$
	☐ HIRED AUTOS ONLY ☐ NON-OWNED AUTOS ONLY						PROPERTY DAMAGE (Per accident)	$
							BAPLS	$
	☐ UMBRELLA LIAB ☐ OCCUR						EACH OCCURRENCE	$
	☐ EXCESS LIAB ☐ CLAIMS-MADE						AGGREGATE	$
	☐ DED ☐ RETENTION $							$
	WORKERS COMPENSATION AND EMPLOYERS' LIABILITY Y/N						☐ PER STATUTE ☐ OTH-ER	
	ANY PROPRIETOR/PARTNER/EXECUTIVE OFFICER/MEMBER EXCLUDED? ☐ (Mandatory in NH)	N/A					E.L. EACH ACCIDENT	$
	If yes, describe under DESCRIPTION OF OPERATIONS below						E.L. DISEASE - EA EMPLOYEE	$
							E.L. DISEASE - POLICY LIMIT	$

DESCRIPTION OF OPERATIONS / LOCATIONS / VEHICLES (ACORD 101, Additional Remarks Schedule, may be attached if more space is required)

Project: City of Waveland Publice Works Facility Pole Barn Replacement(s) Re-Bid

City of Waveland and Compton Engineering, Inc named as additional insured under the Business Auto policy

CERTIFICATE HOLDER

THE CITY OF WAVELAND
301 COLEMAN AVENUE
WAVELAND MS 39576

CANCELLATION

SHOULD ANY OF THE ABOVE DESCRIBED POLICIES BE CANCELLED BEFORE THE EXPIRATION DATE THEREOF, NOTICE WILL BE DELIVERED IN ACCORDANCE WITH THE POLICY PROVISIONS.

AUTHORIZED REPRESENTATIVE

Cynthia Collins

© 1988-2015 ACORD CORPORATION. All rights reserved.

The ACORD name and logo are registered marks of ACORD

CERTIFICATE OF LIABILITY INSURANCE

DATE (MM/DD/YYYY): 10/27/2022

THIS CERTIFICATE IS ISSUED AS A MATTER OF INFORMATION ONLY AND CONFERS NO RIGHTS UPON THE CERTIFICATE HOLDER. THIS CERTIFICATE DOES NOT AFFIRMATIVELY OR NEGATIVELY AMEND, EXTEND OR ALTER THE COVERAGE AFFORDED BY THE POLICIES BELOW. THIS CERTIFICATE OF INSURANCE DOES NOT CONSTITUTE A CONTRACT BETWEEN THE ISSUING INSURER(S), AUTHORIZED REPRESENTATIVE OR PRODUCER, AND THE CERTIFICATE HOLDER.

IMPORTANT: If the certificate holder is an ADDITIONAL INSURED, the policy(ies) must have ADDITIONAL INSURED provisions or be endorsed. If SUBROGATION IS WAIVED, subject to the terms and conditions of the policy, certain policies may require an endorsement. A statement on this certificate does not confer rights to the certificate holder in lieu of such endorsement(s).

PRODUCER Cadence Insurance (formerly BXS Insurance) 633 Delmas Avenue Suite A Pascagoula MS 39567 License#: PC-1092395	CONTACT NAME: Madonna Green PHONE (A/C, No, Ext): 228-366-8166 FAX (A/C, No): 228-863-1957 E-MAIL ADDRESS: madonna.green@cadenceinsurance.com
INSURED Coastal Development & Construction LLC 2010 Old Mobile Highway Pascagoula MS 39567 COASDEV-03	INSURER(S) AFFORDING COVERAGE / NAIC # INSURER A : Colony Insurance Company 39993 INSURER B : Starstone National Insurance Company 25496 INSURER C : American Interstate Ins Co 31895 INSURER D : INSURER E : INSURER F :

COVERAGES **CERTIFICATE NUMBER:** 815522417 **REVISION NUMBER:**

THIS IS TO CERTIFY THAT THE POLICIES OF INSURANCE LISTED BELOW HAVE BEEN ISSUED TO THE INSURED NAMED ABOVE FOR THE POLICY PERIOD INDICATED. NOTWITHSTANDING ANY REQUIREMENT, TERM OR CONDITION OF ANY CONTRACT OR OTHER DOCUMENT WITH RESPECT TO WHICH THIS CERTIFICATE MAY BE ISSUED OR MAY PERTAIN, THE INSURANCE AFFORDED BY THE POLICIES DESCRIBED HEREIN IS SUBJECT TO ALL THE TERMS, EXCLUSIONS AND CONDITIONS OF SUCH POLICIES. LIMITS SHOWN MAY HAVE BEEN REDUCED BY PAID CLAIMS.

INSR LTR	TYPE OF INSURANCE	ADDL INSD	SUBR WVD	POLICY NUMBER	POLICY EFF (MM/DD/YYYY)	POLICY EXP (MM/DD/YYYY)	LIMITS	
A	X COMMERCIAL GENERAL LIABILITY	Y		600GL003212505	11/5/2021	11/5/2022	EACH OCCURRENCE	$ 1,000,000
	CLAIMS-MADE [X] OCCUR						DAMAGE TO RENTED PREMISES (Ea occurrence)	$ 100,000
							MED EXP (Any one person)	$ 5,000
							PERSONAL & ADV INJURY	$ 1,000,000
	GEN'L AGGREGATE LIMIT APPLIES PER:						GENERAL AGGREGATE	$ 2,000,000
	POLICY [X] PRO-JECT [ ] LOC						PRODUCTS - COMP/OP AGG	$ 2,000,000
	OTHER:							$
	AUTOMOBILE LIABILITY						COMBINED SINGLE LIMIT (Ea accident)	$
	ANY AUTO						BODILY INJURY (Per person)	$
	OWNED AUTOS ONLY / SCHEDULED AUTOS						BODILY INJURY (Per accident)	$
	HIRED AUTOS ONLY / NON-OWNED AUTOS ONLY						PROPERTY DAMAGE (Per accident)	$
								$
B	UMBRELLA LIAB X OCCUR	Y		79052B214ALI	11/5/2021	11/5/2022	EACH OCCURRENCE	$ 3,000,000
	X EXCESS LIAB CLAIMS-MADE						AGGREGATE	$ 3,000,000
	DED RETENTION $							$
C	WORKERS COMPENSATION AND EMPLOYERS' LIABILITY Y/N	N/A		AVWCLA3115832022	9/14/2022	9/14/2023	X PER STATUTE OTH-ER	USL&H
	ANYPROPRIETOR/PARTNER/EXECUTIVE OFFICER/MEMBEREXCLUDED? [ ] (Mandatory in NH)						E.L. EACH ACCIDENT	$ 1,000,000
	If yes, describe under DESCRIPTION OF OPERATIONS below						E.L. DISEASE - EA EMPLOYEE	$ 1,000,000
							E.L. DISEASE - POLICY LIMIT	$ 1,000,000

DESCRIPTION OF OPERATIONS / LOCATIONS / VEHICLES (ACORD 101, Additional Remarks Schedule, may be attached if more space is required)

Jackie Grimes is excluded under Workers Compensation coverage
General Liability includes Automatic Additional Insured, Automatic Waiver of Subrogation and Automatic Primary/Non-Contributory when required in written contract/agreement. Workers Compensation includes Automatic Waiver of Subrogation when required in written contract/agreement. Excess Liability is following form.
Project: City of Waveland Public Works Facility Pole Barn Replacement(s) Re-Bid
City of Waveland and Compton Engineering Inc are included as Additional Insured as respects General Liability and Excess Liability when required in written contract/agreement. The Excess Liability policy is excess over the Automobile, General Liability and Employer's Liability policies.

CERTIFICATE HOLDER

City of Waveland
301 Coleman Ave
Waveland MS 39576

CANCELLATION

SHOULD ANY OF THE ABOVE DESCRIBED POLICIES BE CANCELLED BEFORE THE EXPIRATION DATE THEREOF, NOTICE WILL BE DELIVERED IN ACCORDANCE WITH THE POLICY PROVISIONS.

AUTHORIZED REPRESENTATIVE

© 1988-2015 ACORD CORPORATION. All rights reserved.

The ACORD name and logo are registered marks of ACORD

This document has important legal consequences; consultation with an attorney is encouraged with respect to its use or modification. This document should be adapted to the particular circumstances of the contemplated Project and the controlling Laws and Regulations.

STANDARD GENERAL CONDITIONS OF THE CONSTRUCTION CONTRACT

Prepared by

ENGINEERS JOINT CONTRACT DOCUMENTS COMMITTEE

and

Issued and Published Jointly by

ACEC
American Council of Engineering Companies

ASCE American Society of Civil Engineers

The Associated General Contractors of America — Skill, Responsibility, Integrity

National Society of Professional Engineers
Professional Engineers in Private Practice

AMERICAN COUNCIL OF ENGINEERING COMPANIES

ASSOCIATED GENERAL CONTRACTORS OF AMERICA

AMERICAN SOCIETY OF CIVIL ENGINEERS

PROFESSIONAL ENGINEERS IN PRIVATE PRACTICE
A Practice Division of the
NATIONAL SOCIETY OF PROFESSIONAL ENGINEERS

Endorsed by

CONSTRUCTION SPECIFICATIONS INSTITUTE

Copyright © 2007 National Society of Professional Engineers for EJCDC. All rights reserved.

These General Conditions have been prepared for use with the Suggested Forms of Agreement Between Owner and Contractor (EJCDC C-520 or C-525, 2007 Editions). Their provisions are interrelated and a change in one may necessitate a change in the other. Comments concerning their usage are contained in the Narrative Guide to the EJCDC Construction Documents (EJCDC C-001, 2007 Edition). For guidance in the preparation of Supplementary Conditions, see Guide to the Preparation of Supplementary Conditions (EJCDC C-800, 2007 Edition).

Copyright © 2007 National Society of Professional Engineers
1420 King Street, Alexandria, VA 22314-2794
(703) 684-2882
www.nspe.org

American Council of Engineering Companies
1015 15th Street N.W., Washington, DC 20005
(202) 347-7474
www.acec.org

American Society of Civil Engineers
1801 Alexander Bell Drive, Reston, VA 20191-4400
(800) 548-2723
www.asce.org

Associated General Contractors of America
2300 Wilson Boulevard, Suite 400, Arlington, VA 22201-3308
(703) 548-3118
www.agc.org

The copyright for this EJCDC document is owned jointly by the four EJCDC sponsoring organizations and held in trust for their benefit by NSPE.

STANDARD GENERAL CONDITIONS OF THE CONSTRUCTION CONTRACT

TABLE OF CONTENTS

Page

Article 1 – Definitions and Terminology 5
1.01 Defined Terms 5
1.02 Terminology 7

Article 2 – Preliminary Matters 8
2.01 Delivery of Bonds and Evidence of Insurance 8
2.02 Copies of Documents 8
2.03 Commencement of Contract Times; Notice to Proceed 8
2.04 Starting the Work 8
2.05 Before Starting Construction 8
2.06 Preconstruction Conference; Designation of Authorized Representatives 9
2.07 Initial Acceptance of Schedules 9

Article 3 – Contract Documents: Intent, Amending, Reuse 9
3.01 Intent 9
3.02 Reference Standards 9
3.03 Reporting and Resolving Discrepancies 9
3.04 Amending and Supplementing Contract Documents 10
3.05 Reuse of Documents 10
3.06 Electronic Data 10

Article 4 – Availability of Lands; Subsurface and Physical Conditions; Hazardous Environmental Conditions; Reference Points 11
4.01 Availability of Lands 11
4.02 Subsurface and Physical Conditions 11
4.03 Differing Subsurface or Physical Conditions 11
4.04 Underground Facilities 12
4.05 Reference Points 13
4.06 Hazardous Environmental Condition at Site 13

Article 5 – Bonds and Insurance 14
5.01 Performance, Payment, and Other Bonds 14
5.02 Licensed Sureties and Insurers 14
5.03 Certificates of Insurance 15
5.04 Contractor's Insurance 15
5.05 Owner's Liability Insurance 16
5.06 Property Insurance 16
5.07 Waiver of Rights 17
5.08 Receipt and Application of Insurance Proceeds 17
5.09 Acceptance of Bonds and Insurance; Option to Replace 17
5.10 Partial Utilization, Acknowledgment of Property Insurer 18

Article 6 – Contractor's Responsibilities 18
6.01 Supervision and Superintendence 18
6.02 Labor; Working Hours 18
6.03 Services, Materials, and Equipment 18
6.04 Progress Schedule 18
6.05 Substitutes and "Or-Equals" 19
6.06 Concerning Subcontractors, Suppliers, and Others 20
6.07 Patent Fees and Royalties 21

Copyright © 2007 National Society of Professional Engineers for EJCDC. All rights reserved.

6.08 Permits 21
6.09 Laws and Regulations 22
6.10 Taxes 22
6.11 Use of Site and Other Areas 22
6.12 Record Documents 22
6.13 Safety and Protection 23
6.14 Safety Representative 23
6.15 Hazard Communication Programs 23
6.16 Emergencies 23
6.17 Shop Drawings and Samples 24
6.18 Continuing the Work 25
6.19 Contractor's General Warranty and Guarantee 25
6.20 Indemnification 25
6.21 Delegation of Professional Design Services 26

Article 7 – Other Work at the Site 26
7.01 Related Work at Site 26
7.02 Coordination 27
7.03 Legal Relationships 27

Article 8 – Owner's Responsibilities 27
8.01 Communications to Contractor 27
8.02 Replacement of Engineer 27
8.03 Furnish Data 27
8.04 Pay When Due 27
8.05 Lands and Easements; Reports and Tests 27
8.06 Insurance 27
8.07 Change Orders 27
8.08 Inspections, Tests, and Approvals 27
8.09 Limitations on Owner's Responsibilities 27
8.10 Undisclosed Hazardous Environmental Condition 28
8.11 Evidence of Financial Arrangements 28
8.12 Compliance with Safety Program 28

Article 9 – Engineer's Status During Construction 28
9.01 Owner's Representative 28
9.02 Visits to Site 28
9.03 Project Representative 28
9.04 Authorized Variations in Work 28
9.05 Rejecting Defective Work 28
9.06 Shop Drawings, Change Orders and Payments 29
9.07 Determinations for Unit Price Work 29
9.08 Decisions on Requirements of Contract Documents and Acceptability of Work 29
9.09 Limitations on Engineer's Authority and Responsibilities 29
9.10 Compliance with Safety Program 30

Article 10 – Changes in the Work; Claims 30
10.01 Authorized Changes in the Work 30
10.02 Unauthorized Changes in the Work 30
10.03 Execution of Change Orders 30
10.04 Notification to Surety 30
10.05 Claims 30

Article 11 – Cost of the Work; Allowances; Unit Price Work 31
11.01 Cost of the Work 31
11.02 Allowances 33

Copyright © 2007 National Society of Professional Engineers for EJCDC. All rights reserved.

11.03 Unit Price Work 33

Article 12 – Change of Contract Price; Change of Contract Times 33
12.01 Change of Contract Price 33
12.02 Change of Contract Times 34
12.03 Delays 34

Article 13 – Tests and Inspections; Correction, Removal or Acceptance of Defective Work 35
13.01 Notice of Defects 35
13.02 Access to Work 35
13.03 Tests and Inspections 35
13.04 Uncovering Work 35
13.05 Owner May Stop the Work 36
13.06 Correction or Removal of Defective Work 36
13.07 Correction Period 36
13.08 Acceptance of Defective Work 36
13.09 Owner May Correct Defective Work 37

Article 14 – Payments to Contractor and Completion 37
14.01 Schedule of Values 37
14.02 Progress Payments 37
14.03 Contractor's Warranty of Title 39
14.04 Substantial Completion 39
14.05 Partial Utilization 39
14.06 Final Inspection 40
14.07 Final Payment 40
14.08 Final Completion Delayed 41
14.09 Waiver of Claims 41

Article 15 – Suspension of Work and Termination 41
15.01 Owner May Suspend Work 41
15.02 Owner May Terminate for Cause 41
15.03 Owner May Terminate For Convenience 42
15.04 Contractor May Stop Work or Terminate 42

Article 16 – Dispute Resolution 42
16.01 Methods and Procedures 42

Article 17 – Miscellaneous 43
17.01 Giving Notice 43
17.02 Computation of Times 43
17.03 Cumulative Remedies 43
17.04 Survival of Obligations 43
17.05 Controlling Law 43
17.06 Headings 43

Copyright © 2007 National Society of Professional Engineers for EJCDC. All rights reserved.

ARTICLE 1 – DEFINITIONS AND TERMINOLOGY

1.01 *Defined Terms*

A. Wherever used in the Bidding Requirements or Contract Documents and printed with initial capital letters, the terms listed below will have the meanings indicated which are applicable to both the singular and plural thereof. In addition to terms specifically defined, terms with initial capital letters in the Contract Documents include references to identified articles and paragraphs, and the titles of other documents or forms.

1. *Addenda*—Written or graphic instruments issued prior to the opening of Bids which clarify, correct, or change the Bidding Requirements or the proposed Contract Documents.

2. *Agreement*—The written instrument which is evidence of the agreement between Owner and Contractor covering the Work.

3. *Application for Payment*—The form acceptable to Engineer which is to be used by Contractor during the course of the Work in requesting progress or final payments and which is to be accompanied by such supporting documentation as is required by the Contract Documents.

4. *Asbestos*—Any material that contains more than one percent asbestos and is friable or is releasing asbestos fibers into the air above current action levels established by the United States Occupational Safety and Health Administration.

5. *Bid*—The offer or proposal of a Bidder submitted on the prescribed form setting forth the prices for the Work to be performed.

6. *Bidder*—The individual or entity who submits a Bid directly to Owner.

7. *Bidding Documents*—The Bidding Requirements and the proposed Contract Documents (including all Addenda).

8. *Bidding Requirements*—The advertisement or invitation to bid, Instructions to Bidders, Bid security of acceptable form, if any, and the Bid Form with any supplements.

9. *Change Order*—A document recommended by Engineer which is signed by Contractor and Owner and authorizes an addition, deletion, or revision in the Work or an adjustment in the Contract Price or the Contract Times, issued on or after the Effective Date of the Agreement.

10. *Claim*—A demand or assertion by Owner or Contractor seeking an adjustment of Contract Price or Contract Times, or both, or other relief with respect to the terms of the Contract. A demand for money or services by a third party is not a Claim.

11. *Contract*—The entire and integrated written agreement between the Owner and Contractor concerning the Work. The Contract supersedes prior negotiations, representations, or agreements, whether written or oral.

12. *Contract Documents*—Those items so designated in the Agreement. Only printed or hard copies of the items listed in the Agreement are Contract Documents. Approved Shop Drawings, other Contractor submittals, and the reports and drawings of subsurface and physical conditions are not Contract Documents.

13. *Contract Price*—The moneys payable by Owner to Contractor for completion of the Work in accordance with the Contract Documents as stated in the Agreement (subject to the provisions of Paragraph 11.03 in the case of Unit Price Work).

14. *Contract Times*—The number of days or the dates stated in the Agreement to: (i) achieve Milestones, if any; (ii) achieve Substantial Completion; and (iii) complete the Work so that it is ready for final payment as evidenced by Engineer's written recommendation of final payment.

15. *Contractor*—The individual or entity with whom Owner has entered into the Agreement.

16. *Cost of the Work*—See Paragraph 11.01 for definition.

17. *Drawings*—That part of the Contract Documents prepared or approved by Engineer which graphically shows the scope, extent, and character of the Work to be performed by Contractor. Shop Drawings and other Contractor submittals are not Drawings as so defined.

18. *Effective Date of the Agreement*—The date indicated in the Agreement on which it becomes effective, but if no such date is indicated, it means the date on which the Agreement is signed and delivered by the last of the two parties to sign and deliver.

19. *Engineer*—The individual or entity named as such in the Agreement.

Copyright © 2007 National Society of Professional Engineers for EJCDC. All rights reserved.

20. *Field Order*—A written order issued by Engineer which requires minor changes in the Work but which does not involve a change in the Contract Price or the Contract Times.

21. *General Requirements*—Sections of Division 1 of the Specifications.

22. *Hazardous Environmental Condition*—The presence at the Site of Asbestos, PCBs, Petroleum, Hazardous Waste, or Radioactive Material in such quantities or circumstances that may present a substantial danger to persons or property exposed thereto.

23. *Hazardous Waste*—The term Hazardous Waste shall have the meaning provided in Section 1004 of the Solid Waste Disposal Act (42 USC Section 6903) as amended from time to time.

24. *Laws and Regulations; Laws or Regulations*—Any and all applicable laws, rules, regulations, ordinances, codes, and orders of any and all governmental bodies, agencies, authorities, and courts having jurisdiction.

25. *Liens*—Charges, security interests, or encumbrances upon Project funds, real property, or personal property.

26. *Milestone*—A principal event specified in the Contract Documents relating to an intermediate completion date or time prior to Substantial Completion of all the Work.

27. *Notice of Award*—The written notice by Owner to the Successful Bidder stating that upon timely compliance by the Successful Bidder with the conditions precedent listed therein, Owner will sign and deliver the Agreement.

28. *Notice to Proceed*—A written notice given by Owner to Contractor fixing the date on which the Contract Times will commence to run and on which Contractor shall start to perform the Work under the Contract Documents.

29. *Owner*—The individual or entity with whom Contractor has entered into the Agreement and for whom the Work is to be performed.

30. *PCBs*—Polychlorinated biphenyls.

31. *Petroleum*—Petroleum, including crude oil or any fraction thereof which is liquid at standard conditions of temperature and pressure (60 degrees Fahrenheit and 14.7 pounds per square inch absolute), such as oil, petroleum, fuel oil, oil sludge, oil refuse, gasoline, kerosene, and oil mixed with other non-Hazardous Waste and crude oils.

32. *Progress Schedule*—A schedule, prepared and maintained by Contractor, describing the sequence and duration of the activities comprising the Contractor's plan to accomplish the Work within the Contract Times.

33. *Project*—The total construction of which the Work to be performed under the Contract Documents may be the whole, or a part.

34. *Project Manual*—The bound documentary information prepared for bidding and constructing the Work. A listing of the contents of the Project Manual, which may be bound in one or more volumes, is contained in the table(s) of contents.

35. *Radioactive Material*—Source, special nuclear, or byproduct material as defined by the Atomic Energy Act of 1954 (42 USC Section 2011 et seq.) as amended from time to time.

36. *Resident Project Representative*—The authorized representative of Engineer who may be assigned to the Site or any part thereof.

37. *Samples*—Physical examples of materials, equipment, or workmanship that are representative of some portion of the Work and which establish the standards by which such portion of the Work will be judged.

38. *Schedule of Submittals*—A schedule, prepared and maintained by Contractor, of required submittals and the time requirements to support scheduled performance of related construction activities.

39. *Schedule of Values*—A schedule, prepared and maintained by Contractor, allocating portions of the Contract Price to various portions of the Work and used as the basis for reviewing Contractor's Applications for Payment.

40. *Shop Drawings*—All drawings, diagrams, illustrations, schedules, and other data or information which are specifically prepared or assembled by or for Contractor and submitted by Contractor to illustrate some portion of the Work.

41. *Site*—Lands or areas indicated in the Contract Documents as being furnished by Owner upon which the Work is to be performed, including rights-of-way and easements for access thereto, and such other lands

Copyright © 2007 National Society of Professional Engineers for EJCDC. All rights reserved.

furnished by Owner which are designated for the use of Contractor.

42. *Specifications*—That part of the Contract Documents consisting of written requirements for materials, equipment, systems, standards and workmanship as applied to the Work, and certain administrative requirements and procedural matters applicable thereto.

43. *Subcontractor*—An individual or entity having a direct contract with Contractor or with any other Subcontractor for the performance of a part of the Work at the Site.

44. *Substantial Completion*—The time at which the Work (or a specified part thereof) has progressed to the point where, in the opinion of Engineer, the Work (or a specified part thereof) is sufficiently complete, in accordance with the Contract Documents, so that the Work (or a specified part thereof) can be utilized for the purposes for which it is intended. The terms "substantially complete" and "substantially completed" as applied to all or part of the Work refer to Substantial Completion thereof.

45. *Successful Bidder*—The Bidder submitting a responsive Bid to whom Owner makes an award.

46. *Supplementary Conditions*—That part of the Contract Documents which amends or supplements these General Conditions.

47. *Supplier*—A manufacturer, fabricator, supplier, distributor, materialman, or vendor having a direct contract with Contractor or with any Subcontractor to furnish materials or equipment to be incorporated in the Work by Contractor or Subcontractor.

48. *Underground Facilities*—All underground pipelines, conduits, ducts, cables, wires, manholes, vaults, tanks, tunnels, or other such facilities or attachments, and any encasements containing such facilities, including those that convey electricity, gases, steam, liquid petroleum products, telephone or other communications, cable television, water, wastewater, storm water, other liquids or chemicals, or traffic or other control systems.

49. *Unit Price Work*—Work to be paid for on the basis of unit prices.

50. *Work*—The entire construction or the various separately identifiable parts thereof required to be provided under the Contract Documents. Work includes and is the result of performing or providing all labor, services, and documentation necessary to produce such construction, and furnishing, installing, and incorporating all materials and equipment into such construction, all as required by the Contract Documents.

51. *Work Change Directive*—A written statement to Contractor issued on or after the Effective Date of the Agreement and signed by Owner and recommended by Engineer ordering an addition, deletion, or revision in the Work, or responding to differing or unforeseen subsurface or physical conditions under which the Work is to be performed or to emergencies. A Work Change Directive will not change the Contract Price or the Contract Times but is evidence that the parties expect that the change ordered or documented by a Work Change Directive will be incorporated in a subsequently issued Change Order following negotiations by the parties as to its effect, if any, on the Contract Price or Contract Times.

1.02 *Terminology*

A. The words and terms discussed in Paragraph 1.02.B through F are not defined but, when used in the Bidding Requirements or Contract Documents, have the indicated meaning.

B. *Intent of Certain Terms or Adjectives:*

1. The Contract Documents include the terms "as allowed," "as approved," "as ordered," "as directed" or *terms* of like effect or import to authorize an exercise of professional judgment by Engineer. In addition, the adjectives "reasonable," "suitable," "acceptable," "proper," "satisfactory," or adjectives of like effect or import are used to *describe* an action or determination of Engineer as to the Work. It is intended that such exercise of professional judgment, action, or determination will be solely to evaluate, in general, the Work for compliance with the information in the Contract Documents and with the design concept of the Project as a functioning whole as shown or indicated in the Contract Documents (unless there is a specific statement indicating otherwise). The use of any such term or adjective is not intended to and shall not be effective to assign to Engineer any duty or authority to supervise or direct the performance of the Work, or any duty or authority to undertake responsibility contrary to the provisions of Paragraph 9.09 or any other provision of the Contract Documents.

C. *Day:*

1. The word "day" means a calendar day of 24 hours measured from midnight to the next midnight.

D. *Defective:*

Copyright © 2007 National Society of Professional Engineers for EJCDC. All rights reserved.

1. The word "defective," when modifying the word "Work," refers *to* Work that is unsatisfactory, faulty, or deficient in that it:

a. does not conform to the Contract Documents; or

b. does not meet the requirements of any applicable inspection, reference standard, test, or approval referred to in the Contract Documents; or

c. has been damaged prior to Engineer's recommendation of final payment (unless responsibility for the protection thereof has been assumed by Owner at Substantial Completion in accordance with Paragraph 14.04 or 14.05).

E. *Furnish, Install, Perform, Provide:*

1. The word "furnish," when used in connection with services, materials, or equipment, shall mean to supply and deliver said services, materials, or equipment to the Site (or some other specified location) ready for use or installation and in usable or operable condition.

2. The word "install," when used in connection with services, *materials*, or equipment, shall mean to put into use or place in final position said services, materials, or equipment complete and ready for intended use.

3. The words "perform" or "provide," when used in connection with services, materials, or equipment, shall mean to furnish and install said services, materials, or equipment complete and ready for intended use.

4. When "furnish," "install," "perform," or "provide" is not used in *connection* with services, materials, or equipment in a context clearly requiring an obligation of Contractor, "provide" is implied.

F. Unless stated otherwise in the Contract Documents, words or phrases that have a well-known technical or construction industry or trade meaning are used in the Contract Documents in accordance with such recognized meaning.

ARTICLE 2 – PRELIMINARY MATTERS

2.01 *Delivery of Bonds and Evidence of Insurance*

A. When Contractor delivers the executed counterparts of the Agreement to Owner, Contractor shall also deliver to Owner such bonds as Contractor may be required to furnish.

B. *Evidence of Insurance:* Before any Work at the Site is started, Contractor and Owner shall each deliver to the other, with copies to each additional insured identified in the Supplementary Conditions, certificates of insurance (and other evidence of insurance which either of them or any additional insured may reasonably request) which Contractor and Owner respectively are required to purchase and maintain in accordance with Article 5.

2.02 *Copies of Documents*

A. Owner shall furnish to Contractor up to ten printed or hard copies of the Drawings and Project Manual. Additional copies will be furnished upon request at the cost of reproduction.

2.03 *Commencement of Contract Times; Notice to Proceed*

A. The Contract Times will commence to run on the thirtieth day after the Effective Date of the Agreement or, if a Notice to Proceed is given, on the day indicated in the Notice to Proceed. A Notice to Proceed may be given at any time within 30 days after the Effective Date of the Agreement. In no event will the Contract Times commence to run later than the sixtieth day after the day of Bid opening or the thirtieth day after the Effective Date of the Agreement, whichever date is earlier.

2.04 *Starting the Work*

A. Contractor shall start to perform the Work on the date when the Contract Times commence to run. No Work shall be done at the Site prior to the date on which the Contract Times commence to run.

2.05 *Before Starting Construction*

A. *Preliminary Schedules:* Within 10 days after the Effective Date of the Agreement (unless otherwise specified in the General Requirements), Contractor shall submit to Engineer for timely review:

1. a preliminary Progress Schedule indicating the times (numbers of days or dates) for starting and *completing* the various stages of the Work, including any Milestones specified in the Contract Documents;

2. a preliminary Schedule of Submittals; and

3. a *preliminary* Schedule of Values for all of the Work which includes quantities and prices of items which when added together equal the Contract Price and subdivides the Work into component parts in sufficient detail to serve as the basis for progress payments during

Copyright © 2007 National Society of Professional Engineers for EJCDC. All rights reserved.

performance of the Work. Such prices will include an appropriate amount of overhead and profit applicable to each item of Work.

2.06 *Preconstruction Conference; Designation of Authorized Representatives*

A. Before any Work at the Site is started, a conference attended by Owner, Contractor, Engineer, and others as appropriate will be held to establish a working understanding among the parties as to the Work and to discuss the schedules referred to in Paragraph 2.05.A, procedures for handling Shop Drawings and other submittals, processing Applications for Payment, and maintaining required records.

B. At this conference Owner and Contractor each shall designate, in writing, a specific individual to act as its authorized representative with respect to the services and responsibilities under the Contract. Such individuals shall have the authority to transmit instructions, receive information, render decisions relative to the Contract, and otherwise act on behalf of each respective party.

2.07 *Initial Acceptance of Schedules*

A. At least 10 days before submission of the first Application for Payment a conference attended by Contractor, Engineer, and others as appropriate will be held to review for acceptability to Engineer as provided below the schedules submitted in accordance with Paragraph 2.05.A. Contractor shall have an additional 10 days to make corrections and adjustments and to complete and resubmit the schedules. No progress payment shall be made to Contractor until acceptable schedules are submitted to Engineer.

1. The Progress Schedule will be acceptable to Engineer if it provides an orderly progression of the Work to completion within the *Contract* Times. Such acceptance will not impose on Engineer responsibility for the Progress Schedule, for sequencing, scheduling, or progress of the Work, nor interfere with or relieve Contractor from Contractor's full responsibility therefor.

2. Contractor's Schedule of Submittals will be acceptable to Engineer if it *provides* a workable arrangement for reviewing and processing the required submittals.

3. Contractor's Schedule of Values will be acceptable to Engineer as to *form* and substance if it provides a reasonable allocation of the Contract Price to component parts of the Work.

ARTICLE 3 – CONTRACT DOCUMENTS: INTENT, AMENDING, REUSE

3.01 *Intent*

A. The Contract Documents are complementary; what is required by one is as binding as if required by all.

B. It is the intent of the Contract Documents to describe a functionally complete project (or part thereof) to be constructed in accordance with the Contract Documents. Any labor, documentation, services, materials, or equipment that reasonably may be inferred from the Contract Documents or from prevailing custom or trade usage as being required to produce the indicated result will be provided whether or not specifically called for, at no additional cost to Owner.

C. Clarifications and interpretations of the Contract Documents shall be issued by Engineer as provided in Article 9.

3.02 *Reference Standards*

A. Standards, Specifications, Codes, Laws, and Regulations

1. Reference to standards, specifications, manuals, or codes of any technical society, organization, or association, or to Laws or Regulations, whether such reference be specific or by implication, shall mean the standard, specification, manual, code, or Laws or Regulations in effect at *the* time of opening of Bids (or on the Effective Date of the Agreement if there were no Bids), except as may be otherwise specifically stated in the Contract Documents.

2. No provision of any such standard, specification, manual, *or* code, or any instruction of a Supplier, shall be effective to change the duties or responsibilities of Owner, Contractor, or Engineer, or any of their subcontractors, consultants, agents, or employees, from those set forth in the Contract Documents. No such provision or instruction shall be effective to assign to Owner, Engineer, or any of their officers, directors, members, partners, employees, agents, consultants, or subcontractors, any duty or authority to supervise or direct the performance of the Work or any duty or authority to undertake responsibility inconsistent with the provisions of the Contract Documents.

3.03 *Reporting and Resolving Discrepancies*

A. *Reporting* Discrepancies:

Copyright © 2007 National Society of Professional Engineers for EJCDC. All rights reserved.

1. *Contractor's Review of Contract Documents Before Starting Work*: Before undertaking each part of the Work, Contractor shall carefully study and compare the Contract Documents and check and verify pertinent figures therein and all applicable field *measurements*. Contractor shall promptly report in writing to Engineer any conflict, error, ambiguity, or discrepancy which Contractor discovers, or has actual knowledge of, and shall obtain a written interpretation or clarification from Engineer before proceeding with any Work affected thereby.

2. *Contractor's Review of Contract Documents During Performance of Work*: If, during the performance of the Work, Contractor *discovers* any conflict, error, ambiguity, or discrepancy within the Contract Documents, or between the Contract Documents and (a) any applicable Law or Regulation , (b) any standard, specification, manual, or code, or (c) any instruction of any Supplier, then Contractor shall promptly report it to Engineer in writing. Contractor shall not proceed with the Work affected thereby (except in an emergency as required by Paragraph 6.16.A) until an amendment or supplement to the Contract Documents has been issued by one of the methods indicated in Paragraph 3.04.

3. Contractor shall not be liable to Owner or Engineer for failure to report any conflict, error, ambiguity, or discrepancy in the Contract Documents unless Contractor had actual knowledge thereof.

B. Resolving *Discrepancies:*

1. Except as may be otherwise specifically stated in the Contract Documents, the provisions of the Contract Documents shall take precedence in resolving any conflict, error, ambiguity, or discrepancy between the provisions of the Contract Documents and:

a. the provisions of any standard, specification, manual, or code, or the instruction of any Supplier (whether or not specifically incorporated by reference in the Contract Documents); or

b. the provisions of any Laws or Regulations applicable to the performance of the Work (unless such an interpretation of the provisions of the Contract Documents would result in violation of such Law or Regulation).

3.04 *Amending and Supplementing Contract Documents*

A. The Contract Documents may be amended to provide for additions, deletions, and revisions in the Work or to modify the terms and conditions thereof by either a Change Order or a Work Change Directive.

B. The requirements of the Contract Documents may be supplemented, and minor variations and deviations in the Work may be authorized, by one or more of the following ways:

1. A Field Order;

2. Engineer's approval of a Shop Drawing or Sample (subject to the provisions of Paragraph 6.17.D.3); or

3. Engineer's *written* interpretation or clarification.

3.05 *Reuse of Documents*

A. Contractor and any Subcontractor or Supplier shall not:

1. have or acquire any title to or ownership rights in any of the Drawings, Specifications, or other documents (or copies of any thereof) prepared by or bearing the seal of Engineer or its *consultants*, including electronic media editions; or

2. reuse any such Drawings, Specifications, other documents, or copies thereof on extensions of the Project or any other *project* without written consent of Owner and Engineer and specific written verification or adaptation by Engineer.

B. The prohibitions of this Paragraph 3.05 will survive final payment, or termination of the Contract. Nothing herein shall preclude Contractor from retaining copies of the Contract Documents for record purposes.

3.06 *Electronic Data*

A. Unless otherwise stated in the Supplementary Conditions, the data furnished by Owner or Engineer to Contractor, or by Contractor to Owner or Engineer, that may be relied upon are limited to the printed copies (also known as hard copies). Files in electronic media format of text, data, graphics, or other types are furnished only for the convenience of the receiving party. Any conclusion or information obtained or derived from such electronic files will be at the user's sole risk. If there is a discrepancy between the electronic files and the hard copies, the hard copies govern.

B. Because data stored in electronic media format can deteriorate or be modified inadvertently or otherwise without authorization of the data's creator, the

Copyright © 2007 National Society of Professional Engineers for EJCDC. All rights reserved.

party receiving electronic files agrees that it will perform acceptance tests or procedures within 60 days, after which the receiving party shall be deemed to have accepted the data thus transferred. Any errors detected within the 60-day acceptance period will be corrected by the transferring party.

C. When transferring documents in electronic media format, the transferring party makes no representations as to long term compatibility, usability, or readability of documents resulting from the use of software application packages, operating systems, or computer hardware differing from those used by the data's creator.

ARTICLE 4 – AVAILABILITY OF LANDS; SUBSURFACE AND PHYSICAL CONDITIONS; HAZARDOUS ENVIRONMENTAL CONDITIONS; REFERENCE POINTS

4.01 *Availability of Lands*

A. Owner shall furnish the Site. Owner shall notify Contractor of any encumbrances or restrictions not of general application but specifically related to use of the Site with which Contractor must comply in performing the Work. Owner will obtain in a timely manner and pay for easements for permanent structures or permanent changes in existing facilities. If Contractor and Owner are unable to agree on entitlement to or on the amount or extent, if any, of any adjustment in the Contract Price or Contract Times, or both, as a result of any delay in Owner's furnishing the Site or a part thereof, Contractor may make a Claim therefor as provided in Paragraph 10.05.

B. Upon reasonable written request, Owner shall furnish Contractor with a current statement of record legal title and legal description of the lands upon which the Work is to be performed and Owner's interest therein as necessary for giving notice of or filing a mechanic's or construction lien against such lands in accordance with applicable Laws and Regulations.

C. Contractor shall provide for all additional lands and access thereto that may be required for temporary construction facilities or storage of materials and equipment.

4.02 *Subsurface and Physical Conditions*

A. *Reports and Drawings:* The Supplementary Conditions identify:

1. those reports known to Owner of explorations and tests of subsurface conditions at or contiguous to the Site; and

2. those drawings known to Owner of physical conditions relating to existing surface or subsurface structures at the Site (except Underground Facilities).

B. *Limited Reliance by Contractor on Technical Data Authorized:* Contractor may rely upon the accuracy of the "technical data" contained in such reports and drawings, but such reports and drawings are not Contract Documents. Such "technical data" is identified in the Supplementary Conditions. Except for such reliance on such "technical data," Contractor may not rely upon or make any claim against Owner or Engineer, or any of their officers, directors, members, partners, employees, agents, consultants, or subcontractors with respect to:

1. the completeness of such reports and drawings for Contractor's purposes, including, but not limited to, any aspects of the means, methods, techniques, sequences, and procedures of construction to be employed by Contractor, and safety precautions and programs incident thereto; or

2. other data, interpretations, opinions, and information contained in such reports or shown or indicated in such drawings; or

3. any Contractor interpretation of or conclusion drawn from any "technical data" or any such other data, interpretations, opinions, or information.

4.03 *Differing Subsurface or Physical Conditions*

A. *Notice:* If Contractor believes that any subsurface or physical condition that is uncovered or revealed either:

1. is of such a nature as to establish that any "technical data" on which Contractor is entitled to rely as provided in Paragraph 4.02 is materially inaccurate; or

2. is of such a nature as to require a change in the Contract Documents; or

3. differs materially from that shown or indicated in the Contract Documents; or

4. is of an unusual nature, and differs materially from conditions ordinarily encountered and generally recognized as inherent in work of the character provided for in the Contract Documents;

then Contractor shall, promptly after becoming aware thereof and before further disturbing the subsurface or physical conditions or performing any Work in connection therewith (except in an emergency as required by

Copyright © 2007 National Society of Professional Engineers for EJCDC. All rights reserved.

Paragraph 6.16.A), notify Owner and Engineer in writing about such condition. Contractor shall not further disturb such condition or perform any Work in connection therewith (except as aforesaid) until receipt of written order to do so.

B. *Engineer's Review*: After receipt of written notice as required by Paragraph 4.03.A, Engineer will promptly review the pertinent condition, determine the necessity of Owner's obtaining additional exploration or tests with respect thereto, and advise Owner in writing (with a copy to Contractor) of Engineer's findings and conclusions.

C. *Possible Price and Times Adjustments:*

1. The Contract Price or the Contract Times, or both, will be equitably adjusted to the extent that the existence of such differing subsurface or physical condition causes an increase or decrease in Contractor's cost of, or time required for, performance of the Work; subject, however, to the following:

a. such condition must meet any one or more of the categories described in Paragraph 4.03.A; and

b. with respect to Work that is paid for on a unit price basis, any adjustment in Contract Price will be subject to the provisions of Paragraphs 9.07 and 11.03.

2. Contractor shall not be entitled to any adjustment in the Contract Price or Contract Times if:

a. Contractor knew of the existence of such conditions at the time Contractor made a final commitment to Owner with respect to Contract Price and Contract Times by the submission of a Bid or becoming bound under a negotiated contract; or

b. the existence of such condition could reasonably have been discovered or revealed as a result of any examination, investigation, exploration, test, or study of the Site and contiguous areas required by the Bidding Requirements or Contract Documents to be conducted by or for Contractor prior to Contractor's making such final commitment; or

c. Contractor failed to give the written notice as required by Paragraph 4.03.A.

3. If Owner and Contractor are unable to agree on entitlement to or on the amount or extent, if any, of any adjustment in the Contract Price or Contract Times, or both, a Claim may be made therefor as provided in Paragraph 10.05. However, neither Owner or Engineer, or any of their officers, directors, members, partners, employees, agents, consultants, or subcontractors shall be liable to Contractor for any claims, costs, losses, or damages (including but not limited to all fees and charges of engineers, architects, attorneys, and other professionals and all court or arbitration or other dispute resolution costs) sustained by Contractor on or in connection with any other project or anticipated project.

4.04 *Underground Facilities*

A. *Shown or Indicated:* The information and data shown or indicated in the Contract Documents with respect to existing Underground Facilities at or contiguous to the Site is based on information and data furnished to Owner or Engineer by the owners of such Underground Facilities, including Owner, or by others. Unless it is otherwise expressly provided in the Supplementary Conditions:

1. Owner and Engineer shall not be responsible for the accuracy or completeness of any such information or data provided by others; and

2. the cost of all of the following will be included in the Contract Price, and Contractor shall have full responsibility for:

a. reviewing and checking all such information and data;

b. locating all Underground Facilities shown or indicated in the Contract Documents;

c. coordination of the Work with the owners of such Underground Facilities, including Owner, during construction; and

d. the safety and protection of all such Underground Facilities and repairing any damage thereto resulting from the Work.

B. *Not Shown or Indicated:*

1. If an Underground Facility is uncovered or revealed at or contiguous to the Site which was not shown or indicated, or not shown or indicated with reasonable accuracy in the Contract Documents, Contractor shall, promptly after becoming aware thereof and before further disturbing conditions affected thereby or performing any Work in connection therewith (except in an emergency as required by Paragraph 6.16.A), identify the owner of such Underground Facility and give written notice to that owner and to Owner and Engineer. Engineer will promptly

Copyright © 2007 National Society of Professional Engineers for EJCDC. All rights reserved.

review the Underground Facility and determine the extent, if any, to which a change is required in the Contract Documents to reflect and document the consequences of the existence or location of the Underground Facility. During such time, Contractor shall be responsible for the safety and protection of such Underground Facility.

2. If Engineer concludes that a change in the Contract Documents is required, a Work Change Directive or a Change Order will be issued to reflect and document such consequences. An equitable adjustment shall be made in the Contract Price or Contract Times, or both, to the extent that they are attributable to the existence or location of any Underground Facility that was not shown or indicated or not shown or indicated with reasonable accuracy in the Contract Documents and that Contractor did not know of and could not reasonably have been expected to be aware of or to have anticipated. If Owner and Contractor are unable to agree on entitlement to or on the amount or extent, if any, of any such adjustment in Contract Price or Contract Times, Owner or Contractor may make a Claim therefor as provided in Paragraph 10.05.

4.05 *Reference Points*

A. Owner shall provide engineering surveys to establish reference points for construction which in Engineer's judgment are necessary to enable Contractor to proceed with the Work. Contractor shall be responsible for laying out the Work, shall protect and preserve the established reference points and property monuments, and shall make no changes or relocations without the prior written approval of Owner. Contractor shall report to Engineer whenever any reference point or property monument is lost or destroyed or requires relocation because of necessary changes in grades or locations, and shall be responsible for the accurate replacement or relocation of such reference points or property monuments by professionally qualified personnel.

4.06 *Hazardous Environmental Condition at Site*

A. *Reports and Drawings:* The Supplementary Conditions identify those reports and *drawings* known to Owner relating to Hazardous Environmental Conditions that have been identified at the Site.

B. *Limited Reliance by Contractor on Technical Data Authorized:* Contractor may rely upon the accuracy of the "technical data" contained in such reports and drawings, but such reports and drawings are not Contract Documents. Such "technical data" is identified in the Supplementary Conditions. Except for such reliance on such "technical data," Contractor may not rely upon or make any claim against Owner or Engineer, or any of their officers, directors, members, partners, employees, agents, consultants, or subcontractors with respect to:

1. the completeness of such reports and drawings for Contractor's purposes, including, but not limited to, any aspects of the means, methods, techniques, sequences and procedures of construction to be employed by Contractor and safety precautions and programs incident thereto; or

2. other data, interpretations, opinions and information contained in such reports or shown or indicated in such drawings; or

3. any Contractor interpretation of or conclusion drawn from any "technical data" or any such other data, interpretations, opinions or information.

C. Contractor shall not be responsible for any Hazardous Environmental Condition uncovered or revealed at the Site which was not shown or indicated in Drawings or Specifications or identified in the Contract Documents to be within the *scope* of the Work. Contractor shall be responsible for a Hazardous Environmental Condition created with any materials brought to the Site by Contractor, Subcontractors, Suppliers, or anyone else for whom Contractor is responsible.

D. If Contractor encounters a Hazardous Environmental Condition or if Contractor or anyone for whom Contractor is responsible creates a Hazardous Environmental Condition, Contractor shall immediately: (i) *secure* or otherwise isolate such condition; (ii) stop all Work in connection with such condition and in any area affected thereby (except in an emergency as required by Paragraph 6.16.A); and (iii) notify Owner and Engineer (and promptly thereafter confirm such notice in writing). Owner shall promptly consult with Engineer concerning the necessity for Owner to retain a qualified expert to evaluate such condition or take corrective action, if any. Promptly after consulting with Engineer, Owner shall take such actions as are necessary to permit Owner to timely obtain required permits and provide Contractor the written notice required by Paragraph 4.06.E.

E. Contractor shall not be required to resume Work in connection with such condition or in any affected area *until* after Owner has obtained any required permits related thereto and delivered written notice to Contractor: (i) specifying that such condition and any affected area is or has been rendered safe for the resumption of Work; or (ii) specifying any special conditions under which such Work may be resumed safely. If Owner and Contractor cannot agree as to entitlement to or on the amount or extent, if any, of any adjustment in Contract Price or Contract Times, or both, as a result of

Copyright © 2007 National Society of Professional Engineers for EJCDC. All rights reserved.

such Work stoppage or such special conditions under which Work is agreed to be resumed by Contractor, either party may make a Claim therefor as provided in Paragraph 10.05.

F. If after receipt of such written notice Contractor does not agree to resume such Work based on a reasonable belief it is unsafe, or does not agree to resume such Work under such special conditions, then Owner may order the portion of the Work that is in the area affected by such condition to be deleted from the Work. If Owner and Contractor cannot agree as to entitlement to or on the amount or extent, if any, of an adjustment in Contract Price or Contract Times as a result of deleting such portion of the Work, then either party may make a Claim therefor as provided in Paragraph 10.05. Owner may have such deleted portion of the Work performed by Owner's own forces or others in accordance with Article 7.

G. To the fullest extent permitted by Laws and Regulations, Owner shall indemnify and hold harmless Contractor, Subcontractors, and Engineer, and the officers, directors, members, partners, employees, agents, consultants, and subcontractors of each and any of them from and against all claims, costs, losses, and damages (including but not limited to all fees and charges of engineers, architects, attorneys, and other professionals and all court or arbitration or other dispute resolution costs) arising out of or relating to a Hazardous Environmental Condition, provided that such Hazardous Environmental Condition: (i) was not shown or indicated in the Drawings or Specifications or identified in the Contract Documents to be included within the scope of the Work, and (ii) was not created by Contractor or by anyone for whom Contractor is responsible. Nothing in this Paragraph 4.06.G shall obligate Owner to indemnify any individual or entity from and against the consequences of that individual's or entity's own negligence.

H. To the fullest extent permitted by Laws and Regulations, Contractor shall indemnify and hold harmless Owner and Engineer, and the officers, directors, members, partners, employees, agents, consultants, and subcontractors of each and any of them from and against all claims, costs, losses, and damages (including but not limited to all fees and charges of engineers, architects, *attorneys*, and other professionals and all court or arbitration or other dispute resolution costs) arising out of or relating to a Hazardous Environmental Condition created by Contractor or by anyone for whom Contractor is responsible. Nothing in this Paragraph 4.06.H shall obligate Contractor to indemnify any individual or entity from and against the consequences of that individual's or entity's own negligence.

I. The provisions of Paragraphs 4.02, 4.03, and 4.04 do not apply to a Hazardous Environmental Condition uncovered or revealed at the Site.

ARTICLE 5 – BONDS AND INSURANCE

5.01 *Performance, Payment, and Other Bonds*

A. Contractor shall furnish performance and payment bonds, each in an amount at least equal to the Contract Price as security for the faithful performance and payment of all of Contractor's obligations under the Contract *Documents*. These bonds shall remain in effect until one year after the date when final payment becomes due or until completion of the correction period specified in Paragraph 13.07, whichever is later, except as provided otherwise by Laws or Regulations or by the Contract Documents. Contractor shall also furnish such other bonds as are required by the Contract Documents.

B. All bonds shall be in the form prescribed by the Contract Documents except as provided otherwise by Laws or Regulations, and shall be executed by such sureties as are named in the list of "Companies Holding Certificates of Authority as Acceptable Sureties on Federal Bonds and as Acceptable Reinsuring Companies" as published in Circular 570 (amended) by the Financial Management Service, *Surety* Bond Branch, U.S. Department of the Treasury. All bonds signed by an agent or attorney-in-fact must be accompanied by a certified copy of that individual's authority to bind the surety. The evidence of authority shall show that it is effective on the date the agent or attorney-in-fact signed each bond.

C. If the surety on any bond furnished by Contractor is declared bankrupt or becomes insolvent or its right to do *business* is terminated in any state where any part of the Project is located or it ceases to meet the requirements of Paragraph 5.01.B, Contractor shall promptly notify Owner and Engineer and shall, within 20 days after the event giving rise to such notification, provide another bond and surety, both of which shall comply with the requirements of Paragraphs 5.01.B and 5.02.

5.02 *Licensed Sureties and Insurers*

A. All bonds and insurance required by the Contract Documents to be purchased and maintained by Owner or Contractor shall be obtained from surety or insurance *companies* that are duly licensed or authorized in the jurisdiction in which the Project is located to issue bonds or insurance policies for the limits and coverages so required. Such surety and insurance companies shall also meet such additional requirements and qualifications as may be provided in the Supplementary Conditions.

Copyright © 2007 National Society of Professional Engineers for EJCDC. All rights reserved.

5.03 *Certificates of Insurance*

A. Contractor shall deliver to Owner, with copies to each additional insured and loss payee identified in the Supplementary Conditions, *certificates* of insurance (and other evidence of insurance requested by Owner or any other additional insured) which Contractor is required to purchase and maintain.

B. Owner shall deliver to Contractor, with copies to each additional insured and loss payee identified in the Supplementary Conditions, *certificates* of insurance (and other evidence of insurance requested by Contractor or any other additional insured) which Owner is required to purchase and maintain.

C. Failure of Owner to demand such certificates or other evidence of *Contractor's* full compliance with these insurance requirements or failure of Owner to identify a deficiency in compliance from the evidence provided shall not be construed as a waiver of Contractor's obligation to maintain such insurance.

D. Owner does not represent that insurance coverage and limits established in this Contract necessarily will be adequate to protect *Contractor*.

E. The insurance *and* insurance limits required herein shall not be deemed as a limitation on Contractor's liability under the indemnities granted to Owner in the Contract Documents.

5.04 *Contractor's Insurance*

A. Contractor shall purchase and maintain such insurance as is appropriate for the Work being performed and as will provide protection from claims set forth below which may arise out of *or* result from Contractor's performance of the Work and Contractor's other obligations under the Contract Documents, whether it is to be performed by Contractor, any Subcontractor or Supplier, or by anyone directly or indirectly employed by any of them to perform any of the Work, or by anyone for whose acts any of them may be liable:

1. claims under workers' compensation, disability benefits, and other similar employee benefit acts;

2. claims for damages because of bodily injury, occupational sickness or disease, or death of Contractor's employees;

3. claims for damages because of bodily injury, sickness or disease, or death of any person other than Contractor's employees;

4. claims for damages insured by reasonably available personal injury liability coverage which are sustained:

a. by any person as a result of an offense directly or indirectly related to the employment of such person by Contractor, or

b. by any other person for any other reason;

5. claims for damages, other than to the Work itself, because of injury to or destruction of tangible property wherever located, including loss of use resulting therefrom; and

6. claims for damages because of bodily injury or death of any person or property damage arising out of the ownership, maintenance or use of any motor vehicle.

B. The policies of insurance required by this Paragraph 5.04 shall:

1. with respect to insurance required by Paragraphs 5.04.A.3 through 5.04.A.6 inclusive, be written on an occurrence basis, include as additional insureds (subject to any customary exclusion regarding professional liability) Owner and Engineer, and any other individuals or entities identified in the Supplementary Conditions, all of whom shall be listed as additional insureds, and include coverage for the respective officers, directors, members, partners, employees, agents, consultants, and subcontractors of each and any of all such additional insureds, and the insurance afforded to these additional insureds shall provide primary coverage for all claims covered thereby;

2. include at least the specific coverages and be written for not less than the limits of liability provided in the Supplementary Conditions or required by Laws or Regulations, whichever is greater;

3. include contractual liability insurance covering Contractor's indemnity obligations under Paragraphs 6.11 and 6.20;

4. contain a provision or endorsement that the coverage afforded will not be canceled, materially changed or renewal refused until at least 30 days prior written notice has been given to Owner and Contractor and to each other additional insured identified in the Supplementary Conditions to whom a certificate of insurance has been issued (and the certificates of insurance furnished by the Contractor pursuant to Paragraph 5.03 will so provide);

Copyright © 2007 National Society of Professional Engineers for EJCDC. All rights reserved.

5. remain in effect at least until final payment and at all times thereafter when Contractor may be correcting, removing, or replacing defective Work in accordance with Paragraph 13.07; and

6. include completed operations coverage:

a. Such insurance shall remain in effect for two years after final payment.

b. Contractor shall furnish Owner and each other additional insured identified in the Supplementary Conditions, to whom a certificate of insurance has been issued, evidence satisfactory to Owner and any such additional insured of continuation of such insurance at final payment and one year thereafter.

5.05 *Owner's Liability Insurance*

A. In addition to the insurance required to be provided by Contractor under Paragraph 5.04, Owner, at Owner's option, may purchase and maintain at Owner's expense Owner's own liability *insurance* as will protect Owner against claims which may arise from operations under the Contract Documents.

5.06 *Property Insurance*

A. Unless otherwise provided in the Supplementary Conditions, Owner shall purchase and maintain property insurance upon the Work at the Site in the amount of the full replacement cost thereof (subject to such deductible amounts as may be provided in the Supplementary Conditions or required by Laws and Regulations). This insurance shall:

1. include the interests of Owner, Contractor, Subcontractors, and Engineer, and any other individuals or entities identified in the Supplementary Conditions, and the officers, directors, members, partners, employees, agents, consultants, and subcontractors of each and any of them, each of whom is deemed to have an insurable interest and shall be listed as a loss payee;

2. be written on a Builder's Risk "all-risk" policy form that shall at least include insurance for physical loss or damage to the Work, temporary buildings, falsework, and materials and equipment in transit, and shall insure against at least the following perils or causes of loss: fire, lightning, extended coverage, theft, vandalism and malicious mischief, earthquake, collapse, debris removal, demolition occasioned by enforcement of Laws and Regulations, water damage (other than that caused by flood), and such other perils or causes of loss as may be specifically required by the Supplementary Conditions.

3. include expenses incurred in the repair or replacement of any insured property (including but not limited to fees and charges of engineers and architects);

4. cover materials and equipment stored at the Site or at another location that was agreed to in writing by Owner prior to being incorporated in the Work, provided that such materials and equipment have been included in an Application for Payment recommended by Engineer;

5. allow for partial utilization of the Work by Owner;

6. include testing and startup; and

7. be maintained in effect until final payment is made unless otherwise agreed to in writing by Owner, Contractor, and Engineer with 30 days written notice to each other loss payee to whom a certificate of insurance has been issued.

B. Owner shall purchase and maintain such equipment breakdown insurance or additional property insurance as may be required by the Supplementary Conditions or *Laws* and Regulations which will include the interests of Owner, Contractor, Subcontractors, and Engineer, and any other individuals or entities identified in the Supplementary Conditions, and the officers, directors, members, partners, employees, agents, consultants and subcontractors of each and any of them, each of whom is deemed to have an insurable interest and shall be listed as a loss payee.

C. All the policies of insurance (and the certificates or other evidence thereof) required to be purchased and maintained in accordance with this Paragraph 5.06 will contain a provision or endorsement that the coverage afforded will not be canceled or materially changed or *renewal* refused until at least 30 days prior written notice has been given to Owner and Contractor and to each other loss payee to whom a certificate of insurance has been issued and will contain waiver provisions in accordance with Paragraph 5.07.

D. Owner shall not be responsible for purchasing and maintaining any property insurance specified in this Paragraph 5.06 to protect the interests of Contractor, Subcontractors, or others in the Work to the extent of any deductible amounts that are identified in the Supplementary Conditions. The risk of loss within such identified deductible amount will be borne by Contractor, Subcontractors, or others suffering any such loss, and if any of them wishes property insurance coverage within the limits of such amounts, each may purchase and maintain it at the purchaser's own expense.

Copyright © 2007 National Society of Professional Engineers for EJCDC. All rights reserved.

E. If Contractor requests in writing that other special insurance be included in the property insurance policies provided under this *Paragraph* 5.06, Owner shall, if possible, include such insurance, and the cost thereof will be charged to Contractor by appropriate Change Order. Prior to commencement of the Work at the Site, Owner shall in writing advise Contractor whether or not such other insurance has been procured by Owner.

5.07 *Waiver of Rights*

A. Owner and Contractor intend that all policies purchased in accordance with Paragraph 5.06 will protect Owner, Contractor, Subcontractors, and Engineer, and all other individuals or entities identified in the Supplementary Conditions as loss payees (and the officers, directors, members, partners, employees, *agents*, consultants, and subcontractors of each and any of them) in such policies and will provide primary coverage for all losses and damages caused by the perils or causes of loss covered thereby. All such policies shall contain provisions to the effect that in the event of payment of any loss or damage the insurers will have no rights of recovery against any of the insureds or loss payees thereunder. Owner and Contractor waive all rights against each other and their respective officers, directors, members, partners, employees, agents, consultants and subcontractors of each and any of them for all losses and damages caused by, arising out of or resulting from any of the perils or causes of loss covered by such policies and any other property insurance applicable to the Work; and, in addition, waive all such rights against Subcontractors and Engineer, and all other individuals or entities identified in the Supplementary Conditions as loss payees (and the officers, directors, members, partners, employees, agents, consultants, and subcontractors of each and any of them) under such policies for losses and damages so caused. None of the above waivers shall extend to the rights that any party making such waiver may have to the proceeds of insurance held by Owner as trustee or otherwise payable under any policy so issued.

B. Owner waives all rights against Contractor, Subcontractors, and *Engineer*, and the officers, directors, members, partners, employees, agents, consultants and subcontractors of each and any of them for:

1. loss due to business interruption, loss of use, or other consequential loss extending beyond direct physical loss or damage to Owner's property or the Work caused by, arising out of, or resulting from fire or other perils whether or not insured by Owner; and

2. loss or damage to the completed Project or part thereof caused by, arising out of, or resulting from fire or other insured peril or cause of loss covered by any property insurance maintained on the completed Project or part thereof by Owner during partial utilization pursuant to Paragraph 14.05, after Substantial Completion pursuant to Paragraph 14.04, or after final payment pursuant to Paragraph 14.07.

C. Any insurance policy maintained by Owner covering any loss, damage or consequential loss referred to in Paragraph 5.07.B shall contain provisions to the effect that in the event of payment of any such loss, damage, or consequential loss, the insurers will have no rights of recovery against Contractor, Subcontractors, or Engineer, and the officers, directors, members, partners, employees, agents, consultants and subcontractors of each and any of them.

5.08 *Receipt and Application of Insurance Proceeds*

A. Any insured loss under the policies of insurance required by Paragraph 5.06 will be adjusted with Owner and made payable to Owner as fiduciary for the loss payees, as their interests may appear, subject to the requirements of any applicable mortgage clause and of Paragraph 5.08.B. Owner shall deposit in a separate account any money so received and shall distribute it in accordance with such agreement as the parties in interest may reach. If no other special agreement is reached, the damaged Work shall be repaired or replaced, the moneys so received applied on account thereof, and the Work and the cost thereof covered by an appropriate Change Order.

B. Owner as fiduciary shall have power to adjust and settle any loss with the insurers unless one of the parties in interest shall object in writing within 15 days after the occurrence of loss to Owner's exercise of this power. If such objection be made, Owner as fiduciary shall make settlement with the insurers in accordance with such agreement as the parties in interest may reach. If no such agreement among the parties in interest is reached, Owner as fiduciary shall adjust and settle the loss with the insurers and, if required in writing by any party in interest, Owner as fiduciary shall give bond for the proper performance of such duties.

5.09 *Acceptance of Bonds and Insurance; Option to Replace*

A. If either Owner or Contractor has any objection to the coverage afforded by or other provisions of the bonds or insurance required to be purchased and *maintained* by the other party in accordance with Article 5 on the basis of non-conformance with the Contract Documents, the objecting party shall so notify the other party in writing within 10 days after receipt of the certificates (or other evidence requested) required by Paragraph 2.01.B. Owner and Contractor shall each provide

Copyright © 2007 National Society of Professional Engineers for EJCDC. All rights reserved.

to the other such additional information in respect of insurance provided as the other may reasonably request. If either party does not purchase or maintain all of the bonds and insurance required of such party by the Contract Documents, such party shall notify the other party in writing of such failure to purchase prior to the start of the Work, or of such failure to maintain prior to any change in the required coverage. Without prejudice to any other right or remedy, the other party may elect to obtain equivalent bonds or insurance to protect such other party's interests at the expense of the party who was required to provide such coverage, and a Change Order shall be issued to adjust the Contract Price accordingly.

5.10 *Partial Utilization, Acknowledgment of Property Insurer*

A. If Owner finds it necessary to occupy or use a portion or portions of the Work prior to Substantial Completion of all the Work as provided in Paragraph 14.05, no such use or occupancy shall commence before the insurers providing the property *insurance* pursuant to Paragraph 5.06 have acknowledged notice thereof and in writing effected any changes in coverage necessitated thereby. The insurers providing the property insurance shall consent by endorsement on the policy or policies, but the property insurance shall not be canceled or permitted to lapse on account of any such partial use or occupancy.

ARTICLE 6 – CONTRACTOR'S RESPONSIBILITIES

6.01 *Supervision and Superintendence*

A. Contractor shall supervise, inspect, and direct the Work competently and efficiently, devoting such attention thereto and applying such skills and expertise as may be necessary to perform the Work in accordance with the Contract Documents. Contractor shall be solely responsible for the means, *methods*, techniques, sequences, and procedures of construction. Contractor shall not be responsible for the negligence of Owner or Engineer in the design or specification of a specific means, method, technique, sequence, or procedure of construction which is shown or indicated in and expressly required by the Contract Documents.

B. At all times during the progress of the Work, Contractor shall assign a competent resident superintendent who shall not be replaced *without* written notice to Owner and Engineer except under extraordinary circumstances.

6.02 *Labor; Working Hours*

A. Contractor shall provide competent, suitably qualified personnel to survey and lay out the Work and perform *construction* as required by the Contract Documents. Contractor shall at all times maintain good discipline and order at the Site.

B. Except as otherwise required for the safety or *protection* of persons or the Work or property at the Site or adjacent thereto, and except as otherwise stated in the Contract Documents, all Work at the Site shall be performed during regular working hours. Contractor will not permit the performance of Work on a Saturday, Sunday, or any legal holiday without Owner's written consent (which will not be unreasonably withheld) given after prior written notice to Engineer.

6.03 *Services, Materials, and Equipment*

A. Unless otherwise specified in the Contract Documents, Contractor shall provide and assume full responsibility *for* all services, materials, equipment, labor, transportation, construction equipment and machinery, tools, appliances, fuel, power, light, heat, telephone, water, sanitary facilities, temporary facilities, and all other facilities and incidentals necessary for the performance, testing, start-up, and completion of the Work.

B. All materials and equipment incorporated into the Work shall be as specified or, if not specified, shall be of good quality and new, except as otherwise provided in the Contract Documents. All special warranties and guarantees required by the Specifications shall expressly run to the benefit of Owner. If required by Engineer, Contractor shall furnish satisfactory evidence (including reports of required tests) as to the source, kind, and quality of materials and equipment.

C. *All materials and equipment shall be stored, applied, installed*, connected, erected, protected, used, cleaned, and conditioned in accordance with instructions of the applicable Supplier, except as otherwise may be provided in the Contract Documents.

6.04 *Progress Schedule*

A. Contractor shall adhere to the Progress Schedule established in accordance with Paragraph 2.07 as it may be adjusted from time to time as provided below.

1. Contractor shall submit to Engineer for acceptance (to the extent indicated in Paragraph 2.07) proposed adjustments in the Progress Schedule that will not result in changing the Contract Times. Such adjustments

Copyright © 2007 National Society of Professional Engineers for EJCDC. All rights reserved.

will comply with any provisions of the General Requirements applicable thereto.

2. Proposed adjustments in the Progress Schedule that will change the Contract Times shall be submitted in accordance with the requirements of Article 12. Adjustments in Contract Times may only be made by a Change Order.

6.05 *Substitutes and "Or-Equals"*

A. Whenever an item of material or equipment is specified or described in the Contract Documents by using the name of a proprietary item or the name of a particular Supplier, the specification or description is intended to establish the type, function, appearance, and quality required. Unless the specification or description contains or is followed by words reading that no like, equivalent, or "or-equal" item or no substitution is permitted, other items of material or equipment or material or equipment of other Suppliers may be submitted to Engineer for review under the circumstances described below.

1. *"Or-Equal" Items:* If in Engineer's sole discretion an item of material or equipment proposed by Contractor is functionally equal to that named and sufficiently similar so that no change in related Work will be required, it may be considered by Engineer as an "or-equal" item, in which case review and approval of the proposed item may, in Engineer's sole discretion, be accomplished without compliance with some or all of the requirements for approval of proposed substitute items. For the purposes of this Paragraph 6.05.A.1, a proposed item of material or equipment will be considered functionally equal to an item so named if:

a. in the exercise of reasonable judgment Engineer determines that:

1) it is at least equal in materials of construction, quality, durability, appearance, strength, and design characteristics;

2) it will reliably perform at least equally well the function and achieve the results imposed by the design concept of the completed Project as a functioning whole; and

3) it has a proven record of performance and availability of responsive service.

b. Contractor certifies that, if approved and incorporated into the Work:

1) there will be no increase in cost to the Owner or increase in Contract Times; and

2) it will conform substantially to the detailed requirements of the item named in the Contract Documents.

2. Substitute *Items:*

a. If in Engineer's sole discretion an item of material or equipment proposed by Contractor does not qualify as an "or-equal" item under Paragraph 6.05.A.1, it will be considered a proposed substitute item.

b. Contractor shall submit sufficient information as provided below to allow Engineer to determine if the item of material or equipment proposed is essentially equivalent to that named and an acceptable substitute therefor. Requests for review of proposed substitute items of material or equipment will not be accepted by Engineer from anyone other than Contractor.

c. The requirements for review by Engineer will be as set forth in Paragraph 6.05.A.2.d, as supplemented by the General Requirements, and as Engineer may decide is appropriate under the circumstances.

d. Contractor shall make written application to Engineer for review of a proposed substitute item of material or equipment that Contractor seeks to furnish or use. The application:

1) shall certify that the proposed substitute item will:

a) perform adequately the functions and achieve the results called for by the general design,

b) be similar in substance to that specified, and

c) be suited to the same use as that specified;

2) will state:

a) the extent, if any, to which the use of the proposed substitute item will prejudice Contractor's achievement of Substantial Completion on time,

Copyright © 2007 National Society of Professional Engineers for EJCDC. All rights reserved.

b) whether use of the proposed substitute item in the Work will require a change in any of the Contract Documents (or in the provisions of any other direct contract with Owner for other work on the Project) to adapt the design to the proposed substitute item, and

c) whether incorporation or use of the proposed substitute item in connection with the Work is subject to payment of any license fee or royalty;

3) will identify:

a) all variations of the proposed substitute item from that specified, and

b) available engineering, sales, maintenance, repair, and replacement services; and

4) shall contain an itemized estimate of all costs or credits that will result directly or indirectly from use of such substitute item, including costs of redesign and claims of other contractors affected by any resulting change.

B. *Substitute Construction Methods or Procedures:* If a specific means, method, technique, sequence, or procedure of construction is expressly required by the Contract Documents, Contractor may furnish or utilize a substitute means, method, *technique*, sequence, or procedure of construction approved by Engineer. Contractor shall submit sufficient information to allow Engineer, in Engineer's sole discretion, to determine that the substitute proposed is equivalent to that expressly called for by the Contract Documents. The requirements for review by Engineer will be similar to those provided in Paragraph 6.05.A.2.

C. *Engineer's Evaluation:* Engineer will be allowed a reasonable time within which to evaluate each proposal or submittal made *pursuant* to Paragraphs 6.05.A and 6.05.B. Engineer may require Contractor to furnish additional data about the proposed substitute item. Engineer will be the sole judge of acceptability. No "or equal" or substitute will be ordered, installed or utilized until Engineer's review is complete, which will be evidenced by a Change Order in the case of a substitute and an approved Shop Drawing for an "or equal." Engineer will advise Contractor in writing of any negative determination.

D. *Special Guarantee:* Owner may require Contractor to furnish at *Contractor's* expense a special performance guarantee or other surety with respect to any substitute.

E. *Engineer's Cost Reimbursement*: Engineer will record Engineer's costs in evaluating a substitute proposed or submitted by *Contractor* pursuant to Paragraphs 6.05.A.2 and 6.05.B. Whether or not Engineer approves a substitute so proposed or submitted by Contractor, Contractor shall reimburse Owner for the reasonable charges of Engineer for evaluating each such proposed substitute. Contractor shall also reimburse Owner for the reasonable charges of Engineer for making changes in the Contract Documents (or in the provisions of any other direct contract with Owner) resulting from the acceptance of each proposed substitute.

F. *Contractor's Expense*: Contractor shall provide all data in support of any proposed substitute or "or-equal" at Contractor's expense.

6.06 *Concerning Subcontractors, Suppliers, and Others*

A. Contractor shall not employ any Subcontractor, Supplier, or other individual or entity (including those acceptable to Owner as indicated in Paragraph 6.06.B), whether initially or as a replacement, against whom Owner may have reasonable objection. Contractor shall not be required to employ any Subcontractor, Supplier, or other individual or entity to furnish or perform any of the Work against whom Contractor has reasonable objection.

B. If the Supplementary Conditions require the identity of certain Subcontractors, Suppliers, or other individuals or entities to be submitted to Owner in advance for acceptance by Owner by a specified date prior to the Effective Date of the Agreement, and if Contractor has submitted a list thereof in accordance with the Supplementary Conditions, Owner's acceptance (either in writing or by failing to make written objection thereto by the date *indicated* for acceptance or objection in the Bidding Documents or the Contract Documents) of any such Subcontractor, Supplier, or other individual or entity so identified may be revoked on the basis of reasonable objection after due investigation. Contractor shall submit an acceptable replacement for the rejected Subcontractor, Supplier, or other individual or entity, and the Contract Price will be adjusted by the difference in the cost occasioned by such replacement, and an appropriate Change Order will be issued. No acceptance by Owner of any such Subcontractor, Supplier, or other individual or entity, whether initially or as a replacement, shall constitute a waiver of any right of Owner or Engineer to reject defective Work.

Copyright © 2007 National Society of Professional Engineers for EJCDC. All rights reserved.

C. Contractor shall be fully responsible to Owner and Engineer for all acts and omissions of the Subcontractors, Suppliers, and other individuals or entities performing or furnishing any of the Work just as Contractor is responsible for Contractor's own acts and omissions. Nothing in the Contract Documents:

1. shall create for the benefit of any such Subcontractor, Supplier, or other individual or entity any contractual relationship between Owner or Engineer and any such Subcontractor, Supplier or other individual or entity; nor

2. shall create any obligation on the part of Owner or Engineer to pay or to see to the payment of any moneys due any such Subcontractor, Supplier, or other individual or entity except as may otherwise be required by Laws and Regulations.

D. Contractor shall be solely responsible for scheduling and coordinating the Work of Subcontractors, Suppliers, and other individuals or entities performing or furnishing any of the Work under a direct or indirect contract with Contractor.

E. Contractor shall require all Subcontractors, Suppliers, and such other individuals or entities performing or furnishing any of the Work to communicate with Engineer through Contractor.

F. The *divisions* and sections of the Specifications and the identifications of any Drawings shall not control Contractor in dividing the Work among Subcontractors or Suppliers or delineating the Work to be performed by any specific trade.

G. All Work performed for Contractor by a Subcontractor or Supplier will be pursuant to an appropriate agreement *between* Contractor and the Subcontractor or Supplier which specifically binds the Subcontractor or Supplier to the applicable terms and conditions of the Contract Documents for the benefit of Owner and Engineer. Whenever any such agreement is with a Subcontractor or Supplier who is listed as a loss payee on the property insurance provided in Paragraph 5.06, the agreement between the Contractor and the Subcontractor or Supplier will contain provisions whereby the Subcontractor or Supplier waives all rights against Owner, Contractor, Engineer, and all other individuals or entities identified in the Supplementary Conditions to be listed as insureds or loss payees (and the officers, directors, members, partners, employees, agents, consultants, and subcontractors of each and any of them) for all losses and damages caused by, arising out of, relating to, or resulting from any of the perils or causes of loss covered by such policies and any other property insurance applicable to the Work. If the insurers on any such policies require separate waiver forms to be signed by any Subcontractor or Supplier, Contractor will obtain the same.

6.07 *Patent Fees and Royalties*

A. Contractor shall pay all license fees and royalties and assume all costs incident to the use in the performance of the Work or the incorporation in the Work of any invention, design, process, product, or device which is the subject of patent rights or copyrights held by others. If a particular invention, design, process, product, or device is specified in the Contract Documents for use in the performance of the Work and if, to the actual knowledge of Owner or Engineer, its use is subject to patent rights or copyrights calling for the payment of any license fee or royalty to others, the existence of such rights shall be disclosed by Owner in the Contract Documents.

B. To the fullest extent permitted by Laws and Regulations, Owner shall indemnify and hold harmless Contractor, and its officers, directors, members, partners, employees, agents, consultants, and subcontractors from and against all claims, costs, losses, and damages (including but not limited to all fees and charges of engineers, architects, attorneys, and other professionals, and all court or arbitration or other dispute resolution costs) arising out of or relating to any infringement of patent rights or copyrights incident to the use in the performance of the Work or resulting from the incorporation in the Work of any invention, design, process, product, or device specified in the Contract Documents, but not identified as being subject to payment of any license fee or royalty to others required by patent rights or copyrights.

C. To the fullest extent permitted by Laws and Regulations, Contractor shall indemnify and hold harmless Owner and Engineer, and the officers, directors, members, partners, employees, agents, consultants and subcontractors of each and any of them from and against all claims, costs, losses, and damages (including but not limited to all fees and charges of engineers, architects, attorneys, and other professionals and all court or arbitration or other dispute resolution costs) arising out of or relating to any infringement of patent rights or copyrights incident to the use in the performance of the Work or resulting from the incorporation in the Work of any invention, design, process, product, or device not specified in the Contract Documents.

6.08 *Permits*

A. Unless otherwise provided in the Supplementary Conditions, Contractor shall obtain and pay for all construction permits and licenses. Owner shall assist Contractor, when necessary, in obtaining such permits and

Copyright © 2007 National Society of Professional Engineers for EJCDC. All rights reserved.

licenses. Contractor shall pay all governmental charges and inspection fees necessary for the prosecution of the Work which are *applicable* at the time of opening of Bids, or, if there are no Bids, on the Effective Date of the Agreement. Owner shall pay all charges of utility owners for connections for providing permanent service to the Work.

6.09 *Laws and Regulations*

A. Contractor shall give all notices required by and shall comply with all Laws and Regulations applicable to the performance of the *Work*. Except where otherwise expressly required by applicable Laws and Regulations, neither Owner nor Engineer shall be responsible for monitoring Contractor's compliance with any Laws or Regulations.

B. If Contractor performs any Work knowing or having reason to know that it is contrary to Laws or Regulations, Contractor shall bear all claims, costs, losses, and damages (including but not limited to all fees and charges of engineers, architects, attorneys, and other professionals and all court or arbitration or other dispute resolution costs) arising out of or relating to such Work. However, it shall not be Contractor's responsibility to make certain that the Specifications and Drawings are in accordance with Laws and Regulations, but this shall not relieve Contractor of Contractor's obligations under Paragraph 3.03.

C. Changes in Laws or Regulations not known at the time of opening of Bids (or, on the Effective Date of the Agreement if there were no Bids) having an effect on the cost or time of performance of the Work shall be the subject of an adjustment in *Contract* Price or Contract Times. If Owner and Contractor are unable to agree on entitlement to or on the amount or extent, if any, of any such adjustment, a Claim may be made therefor as provided in Paragraph 10.05.

6.10 *Taxes*

A. Contractor shall pay all sales, consumer, use, and other similar taxes required to be paid by Contractor in accordance with the Laws and *Regulations* of the place of the Project which are applicable during the performance of the Work.

6.11 *Use of Site and Other Areas*

A. *Limitation on Use of Site and Other Areas:*

1. Contractor shall confine construction equipment, the storage of materials and equipment, and the operations of workers to the Site and other areas permitted by Laws and Regulations, and shall not unreasonably encumber the Site and other areas with construction equipment or other materials or equipment. Contractor shall assume full responsibility for any damage to any such land or area, or to the owner or occupant thereof, or of any adjacent land or areas resulting from the performance of the Work.

2. Should any claim be made by any such owner or occupant because of the performance of the Work, Contractor shall promptly settle with such other party by negotiation or otherwise resolve the claim by arbitration or other dispute resolution proceeding or at law.

3. To the fullest extent permitted by Laws and Regulations, Contractor shall indemnify and hold harmless Owner and Engineer, and the officers, directors, members, partners, employees, agents, consultants and subcontractors of each and any of them from and against all claims, costs, losses, and damages (including but not limited to all fees and charges of engineers, architects, attorneys, and other professionals and all court or arbitration or other dispute resolution costs) arising out of or relating to any claim or action, legal or equitable, brought by any such owner or occupant against Owner, Engineer, or any other party indemnified hereunder to the extent caused by or based upon Contractor's performance of the Work.

B. *Removal of Debris During Performance of the Work:* During the progress of the Work Contractor shall keep the Site and other areas free from accumulations of waste materials, rubbish, and other debris. Removal and disposal of such waste materials, rubbish, and other debris shall conform to applicable Laws and Regulations.

C. *Cleaning:* Prior to Substantial Completion of the Work Contractor shall clean the Site and the Work and make it ready for utilization by Owner. At the completion of the Work Contractor shall remove from the Site all tools, appliances, construction equipment and machinery, and surplus materials and shall restore to original condition all property not designated for alteration by the Contract Documents.

D. *Loading Structures:* Contractor shall not load nor permit any part of any structure to be loaded in any manner that will endanger the structure, nor shall Contractor subject any part of the Work or adjacent property to stresses or pressures that will endanger it.

6.12 *Record Documents*

A. Contractor shall maintain in a safe place at the Site one record copy of all Drawings, Specifications, Addenda, Change Orders, Work Change Directives, Field

Copyright © 2007 National Society of Professional Engineers for EJCDC. All rights reserved.

Orders, and written interpretations and clarifications in good order and annotated to show changes made during *construction*. These record documents together with all approved Samples and a counterpart of all approved Shop Drawings will be available to Engineer for reference. Upon completion of the Work, these record documents, Samples, and Shop Drawings will be delivered to Engineer for Owner.

6.13 *Safety and Protection*

A. Contractor shall be solely responsible for initiating, maintaining and supervising all safety precautions and programs in *connection* with the Work. Such responsibility does not relieve Subcontractors of their responsibility for the safety of persons or property in the performance of their work, nor for compliance with applicable safety Laws and Regulations. Contractor shall take all necessary precautions for the safety of, and shall provide the necessary protection to prevent damage, injury or loss to:

1. all persons on the Site or who may be affected by the Work;

2. all the Work and materials and equipment to be incorporated therein, whether in storage on or off the Site; and

3. other property at the Site or adjacent thereto, including trees, shrubs, lawns, walks, pavements, roadways, structures, utilities, and Underground Facilities not designated for removal, relocation, or replacement in the course of construction.

B. Contractor shall comply with all applicable Laws and Regulations relating to the safety of persons or property, or to the protection of persons or property from damage, injury, or loss; and shall erect and maintain all necessary safeguards for such safety and protection. Contractor shall notify owners of adjacent property and of Underground Facilities and other utility owners when prosecution of the Work may affect them, and shall cooperate with them in the protection, removal, relocation, and replacement of their property.

C. Contractor shall comply with the applicable requirements of Owner's safety programs, if any. The Supplementary Conditions identify any Owner's safety programs that are applicable to the Work.

D. Contractor shall inform Owner and Engineer of the specific *requirements* of Contractor's safety program with which Owner's and Engineer's employees and representatives must comply while at the Site.

E. All damage, injury, or loss to any property referred to in Paragraph 6.13.A.2 or 6.13.A.3 caused, directly or indirectly, in whole or in part, by Contractor, any Subcontractor, Supplier, or any other individual or entity directly or indirectly employed by any of them to perform any of the Work, or anyone for whose acts any of them may be liable, shall be remedied by Contractor (except damage or loss attributable to the fault of Drawings or Specifications or to the acts or omissions of Owner or Engineer or anyone employed by any of them, or anyone for whose acts any of them may be liable, and not attributable, directly or indirectly, in whole or in part, to the fault or negligence of Contractor or any Subcontractor, Supplier, or other individual or entity directly or indirectly employed by any of them).

F. Contractor's duties and responsibilities for safety and for protection of the Work shall continue until such time as all the Work is completed and Engineer has issued a notice to Owner and Contractor in accordance with Paragraph 14.07.B that the Work is acceptable (except as otherwise expressly provided in connection with Substantial Completion).

6.14 *Safety Representative*

A. Contractor shall designate a qualified and experienced safety representative at the Site whose duties and *responsibilities* shall be the prevention of accidents and the maintaining and supervising of safety precautions and programs.

6.15 *Hazard Communication Programs*

A. Contractor shall be responsible for coordinating any exchange of material safety data sheets or other hazard communication information required to be made available to or exchanged between or among employers at the Site in accordance with Laws or Regulations.

6.16 *Emergencies*

A. In emergencies affecting the safety or protection of persons or the Work or property at the Site or adjacent thereto, Contractor is obligated to act to prevent threatened damage, injury, or loss. Contractor shall give Engineer prompt written notice if Contractor believes that any significant changes in the Work or variations from the Contract *Documents* have been caused thereby or are required as a result thereof. If Engineer determines that a change in the Contract Documents is required because of the action taken by Contractor in response to such an emergency, a Work Change Directive or Change Order will be issued.

Copyright © 2007 National Society of Professional Engineers for EJCDC. All rights reserved.

6.17 *Shop Drawings and Samples*

A. Contractor shall submit Shop Drawings and Samples to *Engineer* for review and approval in accordance with the accepted Schedule of Submittals (as required by Paragraph 2.07). Each submittal will be identified as Engineer may require.

1. *Shop Drawings:*

a. Submit number of copies specified in the General Requirements.

b. Data shown on the Shop Drawings will be complete with respect to quantities, dimensions, specified performance and design criteria, materials, and similar data to show Engineer the services, materials, and equipment Contractor proposes to provide and to enable Engineer to review the information for the limited purposes required by Paragraph 6.17.D.

2. Samples:

a. Submit number of Samples specified in the Specifications.

b. Clearly identify each Sample as to material, Supplier, pertinent data such as catalog numbers, the use for which intended and other data as Engineer may require to enable Engineer to review the submittal for the limited purposes required by Paragraph 6.17.D.

B. Where a Shop Drawing or Sample is required by the Contract Documents or the Schedule of Submittals, any related Work *performed* prior to Engineer's review and approval of the pertinent submittal will be at the sole expense and responsibility of Contractor.

C. *Submittal Procedures:*

1. Before submitting each Shop Drawing or Sample, Contractor shall have:

a. reviewed and coordinated each Shop Drawing or Sample with other Shop Drawings and Samples and with the requirements of the Work and the Contract Documents;

b. determined and verified all field measurements, quantities, dimensions, specified performance and design criteria, installation requirements, materials, catalog numbers, and similar information with respect thereto;

c. determined and verified the suitability of all materials offered with respect to the indicated application, fabrication, shipping, handling, storage, assembly, and installation pertaining to the performance of the Work; and

d. determined and verified all information relative to Contractor's responsibilities for means, methods, techniques, sequences, and procedures of construction, and safety precautions and programs incident thereto.

2. Each submittal shall bear a stamp or specific written certification that Contractor has satisfied Contractor's obligations under the Contract Documents with respect to Contractor's review and approval of that submittal.

3. With each submittal, Contractor shall give Engineer specific written notice of any variations that the Shop Drawing or Sample may have from the requirements of the Contract Documents. This notice shall be both a written communication separate from the Shop Drawings or Sample submittal; and, in addition, by a specific notation made on each Shop Drawing or Sample submitted to Engineer for review and approval of each such variation.

D. *Engineer's Review:*

1. Engineer will provide timely review of Shop Drawings and Samples in accordance with the Schedule of Submittals acceptable to Engineer. Engineer's review and approval will be only to determine if the items covered by the submittals will, after installation or incorporation in the Work, conform to the information given in the Contract Documents and be compatible with the design concept of the completed Project as a functioning whole as indicated by the Contract Documents.

2. Engineer's review and approval will not extend to means, methods, techniques, sequences, or procedures of construction (except where a particular means, method, technique, sequence, or procedure of construction is specifically and expressly called for by the Contract Documents) or to safety precautions or programs incident thereto. The review and approval of a separate item as such will not indicate approval of the assembly in which the item functions.

3. Engineer's review and approval shall not relieve Contractor from responsibility for any variation from the requirements of the Contract Documents unless Contractor has complied with the requirements of Paragraph 6.17.C.3 and Engineer has given written approval of each such variation by specific written notation

Copyright © 2007 National Society of Professional Engineers for EJCDC. All rights reserved.

thereof incorporated in or accompanying the Shop Drawing or Sample. Engineer's review and approval shall not relieve Contractor from responsibility for complying with the requirements of Paragraph 6.17.C.1.

E. *Resubmittal Procedures:*

1. Contractor shall make corrections required by Engineer and shall return the required number of corrected copies of Shop Drawings and submit, as required, new Samples for review and approval. Contractor shall direct specific attention in writing to revisions other than the corrections called for by Engineer on previous submittals.

6.18 *Continuing the Work*

A. Contractor shall carry on the Work and adhere to the Progress Schedule during all disputes or disagreements with Owner. No Work shall be delayed or postponed pending resolution of any disputes or disagreements, except as permitted by Paragraph 15.04 or as Owner and Contractor may otherwise agree in writing.

6.19 *Contractor's General Warranty and Guarantee*

A. Contractor warrants and guarantees to Owner that all Work will be in accordance with the Contract Documents and will not be defective. Engineer and its officers, directors, members, partners, employees, agents, consultants, and subcontractors shall be entitled to rely on representation of Contractor's warranty and guarantee.

B. Contractor's warranty and guarantee hereunder excludes defects or damage caused by:

1. abuse, modification, or improper maintenance or operation by persons other than Contractor, Subcontractors, Suppliers, or any other individual or entity for whom Contractor is responsible; or

2. normal wear and tear under normal usage.

C. Contractor's obligation to perform and complete the Work in accordance with the Contract Documents shall be absolute. None of the following will constitute an acceptance of Work that is not in accordance with the Contract Documents or a release of Contractor's obligation to perform the Work in accordance with the Contract Documents:

1. observations by Engineer;

2. recommendation by Engineer or payment by Owner of any progress or final payment;

3. the issuance of a certificate of Substantial Completion by Engineer or any payment related thereto by Owner;

4. use or occupancy of the Work or any part thereof by Owner;

5. any review and approval of a Shop Drawing or Sample submittal or the issuance of a notice of acceptability by Engineer;

6. any inspection, test, or approval by others; or

7. any correction of defective Work by Owner.

6.20 *Indemnification*

A. To the fullest extent permitted by Laws and Regulations, Contractor shall indemnify and hold harmless Owner and Engineer, and the officers, directors, members, partners, employees, agents, consultants and subcontractors of each and any of them from and against all claims, costs, losses, and damages (including but not limited to all fees and charges of engineers, architects, attorneys, and other professionals and all court or arbitration or other dispute resolution costs) arising out of or relating to the performance of the Work, provided that any such claim, cost, loss, or damage is attributable to bodily injury, sickness, disease, or death, or to injury to or destruction of tangible property (other than the Work itself), including the loss of use resulting therefrom but only to the extent caused by any negligent act or omission of Contractor, any Subcontractor, any Supplier, or any individual or entity directly or indirectly employed by any of them to perform any of the Work or anyone for whose acts any of them may be liable .

B. In any and all claims against Owner or Engineer or any of their officers, directors, members, partners, employees, agents, consultants, or subcontractors by any employee (or the survivor or personal representative of such employee) of Contractor, any Subcontractor, any Supplier, or any individual or entity directly or indirectly employed by any of them to perform any of the Work, or anyone for whose acts any of them may be liable, the indemnification obligation under Paragraph 6.20.A shall not be limited in any way by any limitation on the amount or type of damages, compensation, or benefits payable by or for Contractor or any such Subcontractor, Supplier, or other individual or entity under workers' compensation acts, disability benefit acts, or other employee benefit acts.

Copyright © 2007 National Society of Professional Engineers for EJCDC. All rights reserved.

C. The indemnification obligations of Contractor under Paragraph 6.20.A shall not extend to the liability of Engineer and Engineer's officers, directors, members, partners, employees, agents, consultants and subcontractors arising out of:

1. the preparation or approval of, or the failure to prepare or approve maps, Drawings, opinions, reports, surveys, Change Orders, designs, or Specifications; or

2. giving directions or instructions, or failing to give them, if that is the primary cause of the injury or damage.

6.21 *Delegation of Professional Design Services*

A. Contractor will not be required to provide professional design services unless such services are specifically required by the Contract Documents for a portion of the Work or unless such services are required to carry out Contractor's responsibilities for construction means, methods, techniques, sequences and procedures. Contractor shall not be required to provide professional services in violation of applicable law.

B. If professional design services or certifications by a design professional related to systems, materials or equipment are specifically required of Contractor by the Contract Documents, Owner and Engineer will specify all performance and design criteria that such services must satisfy. Contractor shall cause such services or certifications to be provided by a properly licensed professional, whose signature and seal shall appear on all drawings, calculations, specifications, certifications, Shop Drawings and other submittals prepared by such professional. Shop Drawings and other submittals related to the Work designed or certified by such professional, if prepared by others, shall bear such professional's written approval when submitted to Engineer.

C. Owner and Engineer shall be entitled to rely upon the adequacy, accuracy and completeness of the services, certifications or approvals performed by such design professionals, provided Owner and Engineer have specified to Contractor all performance and design criteria that such services must satisfy.

D. Pursuant to this Paragraph 6.21, Engineer's review and approval of design calculations and design drawings will be only for the limited purpose of checking for conformance with performance and design criteria given and the design concept expressed in the Contract Documents. Engineer's review and approval of Shop Drawings and other submittals (except design calculations and design drawings) will be only for the purpose stated in Paragraph 6.17.D.1.

E. Contractor shall not be responsible for the adequacy of the performance or design criteria required by the Contract Documents.

ARTICLE 7 – OTHER WORK AT THE SITE

7.01 *Related Work at Site*

A. Owner may perform other work related to the Project at the Site with Owner's employees, or through other direct contracts therefor, or have other work performed by utility owners. If such other work is not noted in the Contract Documents, then:

1. written notice thereof will be given to Contractor prior to starting any such other work; and

2. if Owner and Contractor are unable to agree on entitlement to or on the amount or extent, if any, of any adjustment in the Contract Price or Contract Times that should be allowed as a result of such other work, a Claim may be made therefor as provided in Paragraph 10.05.

B. Contractor shall afford each other contractor who is a party to such a direct contract, each utility owner, and Owner, if Owner is performing other work with Owner's employees, proper and safe access to the Site, provide a reasonable opportunity for the introduction and storage of materials and equipment and the execution of such other work, and properly coordinate the Work with theirs. Contractor shall do all cutting, fitting, and patching of the Work that may be required to properly connect or otherwise make its several parts come together and properly integrate with such other work. Contractor shall not endanger any work of others by cutting, excavating, or otherwise altering such work; provided, however, that Contractor may cut or alter others' work with the written consent of Engineer and the others whose work will be affected. The duties and responsibilities of Contractor under this Paragraph are for the benefit of such utility owners and other contractors to the extent that there are comparable provisions for the benefit of Contractor in said direct contracts between Owner and such utility owners and other contractors.

C. If the proper execution or results of any part of Contractor's Work depends upon work performed by others under this Article 7, Contractor shall inspect such other work and promptly report to Engineer in writing any delays, defects, or deficiencies in such other work that render it unavailable or unsuitable for the proper execution and results of Contractor's Work. Contractor's failure to so

Copyright © 2007 National Society of Professional Engineers for EJCDC. All rights reserved.

report will constitute an acceptance of such other work as fit and proper for integration with Contractor's Work except for latent defects and deficiencies in such other work.

7.02 *Coordination*

A. If Owner intends to contract with others for the performance of other work on the Project at the Site, the following will be set forth in Supplementary Conditions:

1. the individual or entity who will have authority and responsibility for coordination of the activities among the various contractors will be identified;

2. the specific matters to be covered by such authority and responsibility will be itemized; and

3. the extent of such authority and responsibilities will be provided.

B. Unless otherwise provided in the Supplementary Conditions, Owner shall have sole authority and responsibility for such coordination.

7.03 *Legal Relationships*

A. Paragraphs 7.01.A and 7.02 are not applicable for utilities not under the control of Owner.

B. Each other direct contract of Owner under Paragraph 7.01.A shall provide that the other contractor is liable to Owner and Contractor for the reasonable direct delay and disruption costs incurred by Contractor as a result of the other contractor's wrongful actions or inactions.

C. Contractor shall be liable to Owner and any other contractor under direct contract to Owner for the reasonable direct delay and disruption costs incurred by such other contractor as a result of Contractor's wrongful action or inactions.

ARTICLE 8 – OWNER'S RESPONSIBILITIES

8.01 *Communications to Contractor*

A. Except as otherwise provided in these General Conditions, Owner shall issue all communications to Contractor through Engineer.

8.02 *Replacement of Engineer*

A. In case of termination of the employment of Engineer, Owner shall appoint an engineer to whom Contractor makes no reasonable objection, whose status under the Contract Documents shall be that of the former Engineer.

8.03 *Furnish Data*

A. Owner shall promptly furnish the data required of Owner under the Contract Documents.

8.04 *Pay When Due*

A. Owner shall make payments to Contractor when they are due as provided in Paragraphs 14.02.C and 14.07.C.

8.05 *Lands and Easements; Reports and Tests*

A. Owner's duties with respect to providing lands and easements and providing engineering surveys to establish reference points are set forth in Paragraphs 4.01 and 4.05. Paragraph 4.02 refers to Owner's identifying and making available to Contractor copies of reports of explorations and tests of subsurface conditions and drawings of physical conditions relating to existing surface or subsurface structures at the Site.

8.06 *Insurance*

A. Owner's responsibilities, if any, with respect to purchasing and maintaining liability and property insurance are set forth in Article 5.

8.07 *Change Orders*

A. Owner is obligated to execute Change Orders as indicated in Paragraph 10.03.

8.08 *Inspections, Tests, and Approvals*

A. Owner's responsibility with respect to certain inspections, tests, and approvals is set forth in Paragraph 13.03.B.

8.09 *Limitations on Owner's Responsibilities*

A. The Owner shall not supervise, direct, or have control or authority over, nor be responsible for, Contractor's means, methods, techniques, sequences, or procedures of construction, or the safety precautions and programs incident thereto, or for any failure of Contractor to comply with Laws and Regulations applicable to the performance of the Work. Owner will not be responsible for Contractor's failure to perform the Work in accordance with the Contract Documents.

Copyright © 2007 National Society of Professional Engineers for EJCDC. All rights reserved.

8.10 *Undisclosed Hazardous Environmental Condition*

A. Owner's responsibility in respect to an undisclosed Hazardous Environmental Condition is set forth in Paragraph 4.06.

8.11 *Evidence of Financial Arrangements*

A. Upon request of Contractor, Owner shall furnish Contractor reasonable evidence that financial arrangements have been made to satisfy Owner's obligations under the Contract Documents.

8.12 *Compliance with Safety Program*

A. While at the Site, Owner's employees and representatives shall comply with the specific applicable requirements of Contractor's safety programs of which Owner has been informed pursuant to Paragraph 6.13.D.

ARTICLE 9 – ENGINEER'S STATUS DURING CONSTRUCTION

9.01 *Owner's Representative*

A. Engineer will be Owner's representative during the construction period. The duties and responsibilities and the limitations of authority of Engineer as Owner's representative during construction are set forth in the Contract Documents.

9.02 *Visits to Site*

A. Engineer will make visits to the Site at intervals appropriate to the various stages of construction as Engineer deems necessary in order to observe as an experienced and qualified design professional the progress that has been made and the quality of the various aspects of Contractor's executed Work. Based on information obtained during such visits and observations, Engineer, for the benefit of Owner, will determine, in general, if the Work is proceeding in accordance with the Contract Documents. Engineer will not be required to make exhaustive or continuous inspections on the Site to check the quality or quantity of the Work. Engineer's efforts will be directed toward providing for Owner a greater degree of confidence that the completed Work will conform generally to the Contract Documents. On the basis of such visits and observations, Engineer will keep Owner informed of the progress of the Work and will endeavor to guard Owner against defective Work.

B. Engineer's visits and observations are subject to all the limitations on Engineer's authority and responsibility set forth in Paragraph 9.09. Particularly, but without limitation, during or as a result of Engineer's visits or observations of Contractor's Work, Engineer will not supervise, direct, control, or have authority over or be responsible for Contractor's means, methods, techniques, sequences, or procedures of construction, or the safety precautions and programs incident thereto, or for any failure of Contractor to comply with Laws and Regulations applicable to the performance of the Work.

9.03 *Project Representative*

A. If Owner and Engineer agree, Engineer will furnish a Resident Project Representative to assist Engineer in providing more extensive observation of the Work. The authority and responsibilities of any such Resident Project Representative and assistants will be as provided in the Supplementary Conditions, and limitations on the responsibilities thereof will be as provided in Paragraph 9.09. If Owner designates another representative or agent to represent Owner at the Site who is not Engineer's consultant, agent or employee, the responsibilities and authority and limitations thereon of such other individual or entity will be as provided in the Supplementary Conditions.

9.04 *Authorized Variations in Work*

A. Engineer may authorize minor variations in the Work from the requirements of the Contract Documents which do not involve an adjustment in the Contract Price or the Contract Times and are compatible with the design concept of the completed Project as a functioning whole as indicated by the Contract Documents. These may be accomplished by a Field Order and will be binding on Owner and also on Contractor, who shall perform the Work involved promptly. If Owner or Contractor believes that a Field Order justifies an adjustment in the Contract Price or Contract Times, or both, and the parties are unable to agree on entitlement to or on the amount or extent, if any, of any such adjustment, a Claim may be made therefor as provided in Paragraph 10.05.

9.05 *Rejecting Defective Work*

A. Engineer will have authority to reject Work which Engineer believes to be defective, or that Engineer believes will not produce a completed Project that conforms to the Contract Documents or that will prejudice the integrity of the design concept of the completed Project as a functioning whole as indicated by the Contract Documents. Engineer will also have authority to require special inspection or testing of the Work as provided in Paragraph 13.04, whether or not the Work is fabricated, installed, or completed.

Copyright © 2007 National Society of Professional Engineers for EJCDC. All rights reserved.

9.06 *Shop Drawings, Change Orders and Payments*

A. In connection with Engineer's authority, and limitations thereof, as to Shop Drawings and Samples, see Paragraph 6.17.

B. In connection with Engineer's authority, and limitations thereof, as to design calculations and design drawings submitted in response to a delegation of professional design services, if any, see Paragraph 6.21.

C. In connection with Engineer's authority as to Change Orders, see Articles 10, 11, and 12.

D. In connection with Engineer's authority as to Applications for Payment, see Article 14.

9.07 *Determinations for Unit Price Work*

A. Engineer will determine the actual quantities and classifications of Unit Price Work performed by Contractor. Engineer will review with Contractor the Engineer's preliminary determinations on such matters before rendering a written decision thereon (by recommendation of an Application for Payment or otherwise). Engineer's written decision thereon will be final and binding (except as modified by Engineer to reflect changed factual conditions or more accurate data) upon Owner and Contractor, subject to the provisions of Paragraph 10.05.

9.08 *Decisions on Requirements of Contract Documents and Acceptability of Work*

A. Engineer will be the initial interpreter of the requirements of the Contract Documents and judge of the acceptability of the Work thereunder. All matters in question and other matters between Owner and Contractor arising prior to the date final payment is due relating to the acceptability of the Work, and the interpretation of the requirements of the Contract Documents pertaining to the performance of the Work, will be referred initially to Engineer in writing within 30 days of the event giving rise to the question.

B. Engineer will, with reasonable promptness, render a written decision on the issue referred. If Owner or Contractor believes that any such decision entitles them to an adjustment in the Contract Price or Contract Times or both, a Claim may be made under Paragraph 10.05. The date of Engineer's decision shall be the date of the event giving rise to the issues referenced for the purposes of Paragraph 10.05.B.

C. Engineer's written decision on the issue referred will be final and binding on Owner and Contractor, subject to the provisions of Paragraph 10.05.

D. When functioning as interpreter and judge under this Paragraph 9.08, Engineer will not show partiality to Owner or Contractor and will not be liable in connection with any interpretation or decision rendered in good faith in such capacity.

9.09 *Limitations on Engineer's Authority and Responsibilities*

A. Neither Engineer's authority or responsibility under this Article 9 or under any other provision of the Contract Documents nor any decision made by Engineer in good faith either to exercise or not exercise such authority or responsibility or the undertaking, exercise, or performance of any authority or responsibility by Engineer shall create, impose, or give rise to any duty in contract, tort, or otherwise owed by Engineer to Contractor, any Subcontractor, any Supplier, any other individual or entity, or to any surety for or employee or agent of any of them.

B. Engineer will not supervise, direct, control, or have authority over or be responsible for Contractor's means, methods, techniques, sequences, or procedures of construction, or the safety precautions and programs incident thereto, or for any failure of Contractor to comply with Laws and Regulations applicable to the performance of the Work. Engineer will not be responsible for Contractor's failure to perform the Work in accordance with the Contract Documents.

C. Engineer will not be responsible for the acts or omissions of Contractor or of any Subcontractor, any Supplier, or of any other individual or entity performing any of the Work.

D. Engineer's review of the final Application for Payment and accompanying documentation and all maintenance and operating instructions, schedules, guarantees, bonds, certificates of inspection, tests and approvals, and other documentation required to be delivered by Paragraph 14.07.A will only be to determine generally that their content complies with the requirements of, and in the case of certificates of inspections, tests, and approvals that the results certified indicate compliance with, the Contract Documents.

E. The limitations upon authority and responsibility set forth in this Paragraph 9.09 shall also apply to the Resident Project Representative, if any, and assistants, if any.

Copyright © 2007 National Society of Professional Engineers for EJCDC. All rights reserved.

9.10 *Compliance with Safety Program*

A. While at the Site, Engineer's employees and representatives shall comply with the specific applicable requirements of Contractor's safety programs of which Engineer has been informed pursuant to Paragraph 6.13.D.

ARTICLE 10 – CHANGES IN THE WORK; CLAIMS

10.01 *Authorized Changes in the Work*

A. Without invalidating the Contract and without notice to any surety, Owner may, at any time or from time to time, order additions, deletions, or revisions in the Work by a Change Order, or a Work Change Directive. Upon receipt of any such document, Contractor shall promptly proceed with the Work involved which will be performed under the applicable conditions of the Contract Documents (except as otherwise specifically provided).

B. If Owner and Contractor are unable to agree on entitlement to, or on the amount or extent, if any, of an adjustment in the Contract Price or Contract Times, or both, that should be allowed as a result of a Work Change Directive, a Claim may be made therefor as provided in Paragraph 10.05.

10.02 *Unauthorized Changes in the Work*

A. Contractor shall not be entitled to an increase in the Contract Price or an extension of the Contract Times with respect to any work performed that is not required by the Contract Documents as amended, modified, or supplemented as provided in Paragraph 3.04, except in the case of an emergency as provided in Paragraph 6.16 or in the case of uncovering Work as provided in Paragraph 13.04.D.

10.03 *Execution of Change Orders*

A. Owner and Contractor shall execute appropriate Change Orders recommended by Engineer covering:

1. changes in the Work which are: (i) ordered by Owner pursuant to Paragraph 10.01.A, (ii) required because of acceptance of defective Work under Paragraph 13.08.A or Owner's correction of defective Work under Paragraph 13.09, or (iii) agreed to by the parties;

2. changes in the Contract Price or Contract Times which are agreed to by the parties, including any undisputed sum or amount of time for Work actually performed in accordance with a Work Change Directive; and

3. changes in the Contract Price or Contract Times which embody the substance of any written decision rendered by Engineer pursuant to Paragraph 10.05; provided that, in lieu of executing any such Change Order, an appeal may be taken from any such decision in accordance with the provisions of the Contract Documents and applicable Laws and Regulations, but during any such appeal, Contractor shall carry on the Work and adhere to the Progress Schedule as provided in Paragraph 6.18.A.

10.04 *Notification to Surety*

A. If the provisions of any bond require notice to be given to a surety of any change affecting the general scope of the Work or the provisions of the Contract Documents (including, but not limited to, Contract Price or Contract Times), the giving of any such notice will be Contractor's responsibility. The amount of each applicable bond will be adjusted to reflect the effect of any such change.

10.05 *Claims*

A. *Engineer's Decision Required*: All Claims, except those waived pursuant to Paragraph 14.09, shall be referred to the Engineer for decision. A decision by Engineer shall be required as a condition precedent to any exercise by Owner or Contractor of any rights or remedies either may otherwise have under the Contract Documents or by Laws and Regulations in respect of such Claims.

B. *Notice:* Written notice stating the general nature of each Claim shall be delivered by the claimant to Engineer and the other party to the Contract promptly (but in no event later than 30 days) after the start of the event giving rise thereto. The responsibility to substantiate a Claim shall rest with the party making the Claim. Notice of the amount or extent of the Claim, with supporting data shall be delivered to the Engineer and the other party to the Contract within 60 days after the start of such event (unless Engineer allows additional time for claimant to submit additional or more accurate data in support of such Claim). A Claim for an adjustment in Contract Price shall be prepared in accordance with the provisions of Paragraph 12.01.B. A Claim for an adjustment in Contract Times shall be prepared in accordance with the provisions of Paragraph 12.02.B. Each Claim shall be accompanied by claimant's written statement that the adjustment claimed is the entire adjustment to which the claimant believes it is entitled as a result of said event. The opposing party shall submit any response to Engineer and the claimant within 30 days after receipt of the claimant's last submittal (unless Engineer allows additional time).

Copyright © 2007 National Society of Professional Engineers for EJCDC. All rights reserved.

C. *Engineer's Action*: Engineer will review each Claim and, within 30 days after receipt of the last submittal of the claimant or the last submittal of the opposing party, if any, take one of the following actions in writing:

1. deny the Claim in whole or in part;

2. approve the Claim; or

3. notify the parties that the Engineer is unable to resolve the Claim if, in the Engineer's sole discretion, it would be inappropriate for the Engineer to do so. For purposes of further resolution of the Claim, such notice shall be deemed a denial.

D. In the event that Engineer does not take action on a Claim within said 30 days, the Claim shall be deemed denied.

E. Engineer's written action under Paragraph 10.05.C or denial pursuant to Paragraphs 10.05.C.3 or 10.05.D will be final and binding upon Owner and Contractor, unless Owner or Contractor invoke the dispute resolution procedure set forth in Article 16 within 30 days of such action or denial.

F. No Claim for an adjustment in Contract Price or Contract Times will be valid if not submitted in accordance with this Paragraph 10.05.

ARTICLE 11 – COST OF THE WORK; ALLOWANCES; UNIT PRICE WORK

11.01 *Cost of the Work*

A. *Costs Included:* The term Cost of the Work means the sum of all costs, except those excluded in Paragraph 11.01.B, necessarily incurred and paid by Contractor in the proper performance of the Work. When the value of any Work covered by a Change Order or when a Claim for an adjustment in Contract Price is determined on the basis of Cost of the Work, the costs to be reimbursed to Contractor will be only those additional or incremental costs required because of the change in the Work or because of the event giving rise to the Claim. Except as otherwise may be agreed to in writing by Owner, such costs shall be in amounts no higher than those prevailing in the locality of the Project, shall not include any of the costs itemized in Paragraph 11.01.B, and shall include only the following items:

1. Payroll costs for employees in the direct employ of Contractor in the performance of the Work under schedules of job classifications agreed upon by Owner and Contractor. Such employees shall include, without limitation, superintendents, foremen, and other personnel employed full time on the Work. Payroll costs for employees not employed full time on the Work shall be apportioned on the basis of their time spent on the Work. Payroll costs shall include, but not be limited to, salaries and wages plus the cost of fringe benefits, which shall include social security contributions, unemployment, excise, and payroll taxes, workers' compensation, health and retirement benefits, bonuses, sick leave, vacation and holiday pay applicable thereto. The expenses of performing Work outside of regular working hours, on Saturday, Sunday, or legal holidays, shall be included in the above to the extent authorized by Owner.

2. Cost of all materials and equipment furnished and incorporated in the Work, including costs of transportation and storage thereof, and Suppliers' field services required in connection therewith. All cash discounts shall accrue to Contractor unless Owner deposits funds with Contractor with which to make payments, in which case the cash discounts shall accrue to Owner. All trade discounts, rebates and refunds and returns from sale of surplus materials and equipment shall accrue to Owner, and Contractor shall make provisions so that they may be obtained.

3. Payments made by Contractor to Subcontractors for Work performed by Subcontractors. If required by Owner, Contractor shall obtain competitive bids from subcontractors acceptable to Owner and Contractor and shall deliver such bids to Owner, who will then determine, with the advice of Engineer, which bids, if any, will be acceptable. If any subcontract provides that the Subcontractor is to be paid on the basis of Cost of the Work plus a fee, the Subcontractor's Cost of the Work and fee shall be determined in the same manner as Contractor's Cost of the Work and fee as provided in this Paragraph 11.01.

4. Costs of special consultants (including but not limited to engineers, architects, testing laboratories, surveyors, attorneys, and accountants) employed for services specifically related to the Work.

5. Supplemental costs including the following:

a. The proportion of necessary transportation, travel, and subsistence expenses of Contractor's employees incurred in discharge of duties connected with the Work.

b. Cost, including transportation and maintenance, of all materials, supplies, equipment, machinery, appliances, office, and temporary facilities at the Site, and hand tools not owned by the workers,

Copyright © 2007 National Society of Professional Engineers for EJCDC. All rights reserved.

which are consumed in the performance of the Work, and cost, less market value, of such items used but not consumed which remain the property of Contractor.

c. Rentals of all construction equipment and machinery, and the parts thereof whether rented from Contractor or others in accordance with rental agreements approved by Owner with the advice of Engineer, and the costs of transportation, loading, unloading, assembly, dismantling, and removal thereof. All such costs shall be in accordance with the terms of said rental agreements. The rental of any such equipment, machinery, or parts shall cease when the use thereof is no longer necessary for the Work.

d. Sales, consumer, use, and other similar taxes related to the Work, and for which Contractor is liable, as imposed by Laws and Regulations.

e. Deposits lost for causes other than negligence of Contractor, any Subcontractor, or anyone directly or indirectly employed by any of them or for whose acts any of them may be liable, and royalty payments and fees for permits and licenses.

f. Losses and damages (and related expenses) caused by damage to the Work, not compensated by insurance or otherwise, sustained by Contractor in connection with the performance of the Work (except losses and damages within the deductible amounts of property insurance established in accordance with Paragraph 5.06.D), provided such losses and damages have resulted from causes other than the negligence of Contractor, any Subcontractor, or anyone directly or indirectly employed by any of them or for whose acts any of them may be liable. Such losses shall include settlements made with the written consent and approval of Owner. No such losses, damages, and expenses shall be included in the Cost of the Work for the purpose of determining Contractor's fee.

g. The cost of utilities, fuel, and sanitary facilities at the Site.

h. Minor expenses such as telegrams, long distance telephone calls, telephone service at the Site, express and courier services, and similar petty cash items in connection with the Work.

i. The costs of premiums for all bonds and insurance Contractor is required by the Contract Documents to purchase and maintain.

B. *Costs Excluded:* The term Cost of the Work shall not include any of the following items:

1. Payroll costs and other compensation of Contractor's officers, executives, principals (of partnerships and sole proprietorships), general managers, safety managers, engineers, architects, estimators, attorneys, auditors, accountants, purchasing and contracting agents, expediters, timekeepers, clerks, and other personnel employed by Contractor, whether at the Site or in Contractor's principal or branch office for general administration of the Work and not specifically included in the agreed upon schedule of job classifications referred to in Paragraph 11.01.A.1 or specifically covered by Paragraph 11.01.A.4, all of which are to be considered administrative costs covered by the Contractor's fee.

2. Expenses of Contractor's principal and branch offices other than Contractor's office at the Site.

3. Any part of Contractor's capital expenses, including interest on Contractor's capital employed for the Work and charges against Contractor for delinquent payments.

4. Costs due to the negligence of Contractor, any Subcontractor, or anyone directly or indirectly employed by any of them or for whose acts any of them may be liable, including but not limited to, the correction of defective Work, disposal of materials or equipment wrongly supplied, and making good any damage to property.

5. Other overhead or general expense costs of any kind and the costs of any item not specifically and expressly included in Paragraphs 11.01.A.

C. *Contractor's Fee:* When all the Work is performed on the basis of cost-plus, Contractor's fee shall be determined as set forth in the Agreement. When the value of any Work covered by a Change Order or when a Claim for an adjustment in Contract Price is determined on the basis of Cost of the Work, Contractor's fee shall be determined as set forth in Paragraph 12.01.C.

D. *Documentation:* Whenever the Cost of the Work for any purpose is to be determined pursuant to Paragraphs 11.01.A and 11.01.B, Contractor will establish and maintain records thereof in accordance with generally accepted accounting practices and submit in a form acceptable to Engineer an itemized cost breakdown together with supporting data.

Copyright © 2007 National Society of Professional Engineers for EJCDC. All rights reserved.

11.02 *Allowances*

A. It is understood that Contractor has included in the Contract Price all allowances so named in the Contract Documents and shall cause the Work so covered to be performed for such sums and by such persons or entities as may be acceptable to Owner and Engineer.

B. *Cash* Allowances:

1. Contractor agrees that:

a. the cash allowances include the cost to Contractor (less any applicable trade discounts) of materials and equipment required by the allowances to be delivered at the Site, and all applicable taxes; and

b. Contractor's costs for unloading and handling on the Site, labor, installation, overhead, profit, and other expenses contemplated for the cash allowances have been included in the Contract Price and not in the allowances, and no demand for additional payment on account of any of the foregoing will be valid.

C. *Contingency* Allowance:

1. Contractor agrees that a contingency allowance, if any, is for the sole use of Owner to cover unanticipated costs.

D. Prior to final payment, an appropriate Change Order will be issued as recommended by Engineer to reflect actual amounts due Contractor on account of Work covered by allowances, and the Contract Price shall be correspondingly adjusted.

11.03 *Unit Price Work*

A. Where the Contract Documents provide that all or part of the Work is to be Unit Price Work, initially the Contract Price will be *deemed* to include for all Unit Price Work an amount equal to the sum of the unit price for each separately identified item of Unit Price Work times the estimated quantity of each item as indicated in the Agreement.

B. The estimated quantities of items of Unit Price Work are not guaranteed and are solely for the purpose of comparison of Bids and determining an initial Contract Price. *Determinations* of the actual quantities and classifications of Unit Price Work performed by Contractor will be made by Engineer subject to the provisions of Paragraph 9.07.

C. Each unit *price* will be deemed to include an amount considered by Contractor to be adequate to cover Contractor's overhead and profit for each separately identified item.

D. Owner or Contractor may make a Claim for an adjustment in the *Contract* Price in accordance with Paragraph 10.05 if:

1. the quantity of any item of Unit Price Work performed by Contractor differs materially and significantly from the estimated quantity of such item indicated in the Agreement; and

2. there is no corresponding adjustment with respect to any other item of Work; and

3. Contractor believes that Contractor is entitled to an increase in Contract Price as a result of having incurred additional expense or Owner believes that Owner is entitled to a decrease in Contract Price and the parties are unable to agree as to the amount of any such increase or decrease.

ARTICLE 12 – CHANGE OF CONTRACT PRICE; CHANGE OF CONTRACT TIMES

12.01 *Change of Contract Price*

A. The Contract Price may only be changed by a Change Order. Any *Claim* for an adjustment in the Contract Price shall be based on written notice submitted by the party making the Claim to the Engineer and the other party to the Contract in accordance with the provisions of Paragraph 10.05.

B. The value of any Work covered by a Change Order or of any Claim for an adjustment in the Contract Price will be *determined* as follows:

1. where the Work involved is covered by unit prices contained in the Contract Documents, by application of such unit prices to the quantities of the items involved (subject to the provisions of Paragraph 11.03); or

2. where the Work involved is not covered by unit prices contained in the Contract Documents, by a mutually agreed lump sum (which may include an allowance for overhead and profit not necessarily in accordance with Paragraph 12.01.C.2); or

3. where the Work involved is not covered by unit prices contained in the Contract Documents and agreement to a lump sum is not reached under Paragraph 12.01.B.2, on the basis of the Cost of the Work (determined as provided in Paragraph 11.01) plus a Contractor's fee for

Copyright © 2007 National Society of Professional Engineers for EJCDC. All rights reserved.

overhead and profit (determined as provided in Paragraph 12.01.C).

C. *Contractor's Fee:* The Contractor's fee for overhead and profit shall be determined as follows:

1. a mutually acceptable fixed fee; or

2. if a fixed fee is not agreed upon, then a fee based on the following percentages of the various portions of the Cost of the Work:

a. for costs incurred under Paragraphs 11.01.A.1 and 11.01.A.2, the Contractor's fee shall be 15 percent;

b. for costs incurred under Paragraph 11.01.A.3, the Contractor's fee shall be five percent;

c. where one or more tiers of subcontracts are on the basis of Cost of the Work plus a fee and no fixed fee is agreed upon, the intent of Paragraphs 12.01.C.2.a and 12.01.C.2.b is that the Subcontractor who actually performs the Work, at whatever tier, will be paid a fee of 15 percent of the costs incurred by such Subcontractor under Paragraphs 11.01.A.1 and 11.01.A.2 and that any higher tier Subcontractor and Contractor will each be paid a fee of five percent of the amount paid to the next lower tier Subcontractor;

d. no fee shall be payable on the basis of costs itemized under Paragraphs 11.01.A.4, 11.01.A.5, and 11.01.B;

e. the amount of credit to be allowed by Contractor to Owner for any change which results in a net decrease in cost will be the amount of the actual net decrease in cost plus a deduction in Contractor's fee by an amount equal to five percent of such net decrease; and

f. when both additions and credits are involved in any one change, the adjustment in Contractor's fee shall be computed on the basis of the net change in accordance with Paragraphs 12.01.C.2.a through 12.01.C.2.e, inclusive.

12.02 *Change of Contract Times*

A. The Contract Times may only be changed by a Change Order. Any Claim for an adjustment in the Contract Times *shall* be based on written notice submitted by the party making the Claim to the Engineer and the other party to the Contract in accordance with the provisions of Paragraph 10.05.

B. Any adjustment of the Contract Times covered by a Change Order or any Claim for an adjustment in the Contract Times will be determined in accordance with the provisions of this Article 12.

12.03 *Delays*

A. Where Contractor is prevented from completing any part of the Work within the Contract Times due to delay beyond the control of Contractor, the Contract Times will be extended in an amount equal to the time lost due to such delay if a *Claim* is made therefor as provided in Paragraph 12.02.A. Delays beyond the control of Contractor shall include, but not be limited to, acts or neglect by Owner, acts or neglect of utility owners or other contractors performing other work as contemplated by Article 7, fires, floods, epidemics, abnormal weather conditions, or acts of God.

B. If Owner, Engineer, or other contractors or utility owners performing other work for Owner as contemplated by Article 7, or anyone for whom Owner is responsible, delays, disrupts, or interferes with the performance or *progress* of the Work, then Contractor shall be entitled to an equitable adjustment in the Contract Price or the Contract Times, or both. Contractor's entitlement to an adjustment of the Contract Times is conditioned on such adjustment being essential to Contractor's ability to complete the Work within the Contract Times.

C. If Contractor is delayed in the performance or progress of the Work by fire, flood, epidemic, abnormal weather conditions, acts of God, acts or failures to act of utility owners not under the control of Owner, or other causes not the *fault* of and beyond control of Owner and Contractor, then Contractor shall be entitled to an equitable adjustment in Contract Times, if such adjustment is essential to Contractor's ability to complete the Work within the Contract Times. Such an adjustment shall be Contractor's sole and exclusive remedy for the delays described in this Paragraph 12.03.C.

D. Owner, Engineer, and their officers, directors, members, partners, employees, agents, consultants, or subcontractors shall not be liable to Contractor for any claims, costs, losses, or damages (including but not limited to all fees and charges of engineers, architects, attorneys, and other professionals and all court or arbitration or other dispute resolution costs) sustained by Contractor on or in connection with any other project or anticipated project.

E. Contractor shall not be entitled to an adjustment in Contract Price or Contract Times for delays within the *control* of Contractor. Delays attributable to and

Copyright © 2007 National Society of Professional Engineers for EJCDC. All rights reserved.

within the control of a Subcontractor or Supplier shall be deemed to be delays within the control of Contractor.

ARTICLE 13 – TESTS AND INSPECTIONS; CORRECTION, REMOVAL OR ACCEPTANCE OF DEFECTIVE WORK

13.01 *Notice of Defects*

A. Prompt notice of all defective Work of which Owner or *Engineer* has actual knowledge will be given to Contractor. Defective Work may be rejected, corrected, or accepted as provided in this Article 13.

13.02 *Access to Work*

A. Owner, Engineer, their consultants and other representatives and personnel of Owner, independent testing laboratories, and governmental agencies with jurisdictional interests will have access to the Site and the Work at reasonable times for their observation, inspection, and testing. Contractor shall provide them proper and safe conditions for such access and advise them of Contractor's safety procedures and programs so that they may comply therewith as applicable.

13.03 *Tests and Inspections*

A. Contractor shall give Engineer timely notice of readiness of the Work for all required inspections, tests, or approvals and shall cooperate with inspection and testing personnel to facilitate required inspections or tests.

B. Owner shall employ and pay for the services of an independent testing laboratory to perform all inspections, tests, or approvals required by the Contract Documents except:

1. for inspections, tests, or approvals covered by Paragraphs 13.03.C and 13.03.D below;

2. that costs incurred in connection with tests or inspections conducted pursuant to Paragraph 13.04.B shall be paid as provided in Paragraph 13.04.C; and

3. as otherwise specifically provided in the Contract Documents.

C. If Laws or Regulations of any public body having jurisdiction require any Work (or part thereof) specifically to be *inspected,* tested, or approved by an employee or other representative of such public body, Contractor shall assume full responsibility for arranging and obtaining such inspections, tests, or approvals, pay all costs in connection therewith, and furnish Engineer the required certificates of inspection or approval.

D. Contractor shall be responsible for arranging and obtaining and shall pay all costs in connection with any inspections, tests, or approvals required for Owner's and Engineer's acceptance of materials or equipment to be incorporated in the *Work*; or acceptance of materials, mix designs, or equipment submitted for approval prior to Contractor's purchase thereof for incorporation in the Work. Such inspections, tests, or approvals shall be performed by organizations acceptable to Owner and Engineer.

E. If any Work (or the work of others) that is to be inspected, tested, or approved is covered by Contractor without *written* concurrence of Engineer, Contractor shall, if requested by Engineer, uncover such Work for observation.

F. Uncovering Work as provided in Paragraph 13.03.E *shall* be at Contractor's expense unless Contractor has given Engineer timely notice of Contractor's intention to cover the same and Engineer has not acted with reasonable promptness in response to such notice.

13.04 *Uncovering Work*

A. If any Work is covered contrary to the written request of Engineer, it must, if requested by Engineer, be *uncovered* for Engineer's observation and replaced at Contractor's expense.

B. If Engineer considers it necessary or advisable that covered Work be observed by Engineer or inspected or tested by others, Contractor, at Engineer's request, shall uncover, *expose*, or otherwise make available for observation, inspection, or testing as Engineer may require, that portion of the Work in question, furnishing all necessary labor, material, and equipment.

C. If it is found that the uncovered Work is defective, Contractor shall pay all claims, costs, losses, and damages (including but not limited to all fees and charges of engineers, architects, attorneys, and other professionals and all court or arbitration or other dispute resolution costs) arising out of or relating to such uncovering, exposure, observation, inspection, and testing, and of satisfactory replacement or reconstruction (including but not limited to all costs of *repair* or replacement of work of others); and Owner shall be entitled to an appropriate decrease in the Contract Price. If the parties are unable to agree as to the amount thereof, Owner may make a Claim therefor as provided in Paragraph 10.05.

Copyright © 2007 National Society of Professional Engineers for EJCDC. All rights reserved.

D. If the uncovered Work is not found to be defective, Contractor shall be allowed an increase in the Contract Price or an extension of the Contract Times, or both, directly attributable to such uncovering, exposure, observation, inspection, testing, replacement, and reconstruction. If the parties are unable to agree as to the amount or extent thereof, Contractor may make a Claim therefor as provided in Paragraph 10.05.

13.05 *Owner May Stop the Work*

A. If the Work is defective, or Contractor fails to supply sufficient skilled workers or suitable materials or equipment, or *fails* to perform the Work in such a way that the completed Work will conform to the Contract Documents, Owner may order Contractor to stop the Work, or any portion thereof, until the cause for such order has been eliminated; however, this right of Owner to stop the Work shall not give rise to any duty on the part of Owner to exercise this right for the benefit of Contractor, any Subcontractor, any Supplier, any other individual or entity, or any surety for, or employee or agent of any of them.

13.06 *Correction or Removal of Defective Work*

A. Promptly after receipt of written notice, Contractor shall correct all defective Work, whether or not fabricated, installed, or completed, or, if the Work has been rejected by Engineer, remove it from the Project and replace it with Work that is not *defective*. Contractor shall pay all claims, costs, losses, and damages (including but not limited to all fees and charges of engineers, architects, attorneys, and other professionals and all court or arbitration or other dispute resolution costs) arising out of or relating to such correction or removal (including but not limited to all costs of repair or replacement of work of others).

B. When correcting defective Work under the terms of this Paragraph 13.06 or Paragraph 13.07, Contractor shall take no *action* that would void or otherwise impair Owner's special warranty and guarantee, if any, on said Work.

13.07 *Correction Period*

A. If within one year after the date of Substantial Completion (or such longer period of time as may be prescribed by the terms of any applicable special guarantee required by the Contract Documents) or by any specific provision of the Contract Documents, any Work is found to be defective, or if the repair of any damages to the land or areas made available for Contractor's use by Owner or permitted by Laws and Regulations as contemplated in Paragraph 6.11.A is found to be defective, Contractor shall promptly, without cost to Owner and in accordance with Owner's written instructions:

1. repair such defective land or areas; or

2. correct such defective Work; or

3. if the defective Work has been rejected by Owner, remove it from the Project and replace it with Work that is not defective, and

4. satisfactorily correct or repair or remove and replace any damage to other Work, to the work of others or other land or areas resulting therefrom.

B. If Contractor does not *promptly* comply with the terms of Owner's written instructions, or in an emergency where delay would cause serious risk of loss or damage, Owner may have the defective Work corrected or repaired or may have the rejected Work removed and replaced. All claims, costs, losses, and damages (including but not limited to all fees and charges of engineers, architects, attorneys, and other professionals and all court or arbitration or other dispute resolution costs) arising out of or relating to such correction or repair or such removal and replacement (including but not limited to all costs of repair or replacement of work of others) will be paid by Contractor.

C. In special circumstances where a particular item of *equipment* is placed in continuous service before Substantial Completion of all the Work, the correction period for that item may start to run from an earlier date if so provided in the Specifications.

D. Where defective Work (and damage to other Work resulting therefrom) has been corrected or removed and replaced under this Paragraph 13.07, the correction period hereunder with respect to such Work will be extended *for* an additional period of one year after such correction or removal and replacement has been satisfactorily completed.

E. Contractor's obligations under this Paragraph 13.07 are in addition to any other obligation or warranty. The *provisions* of this Paragraph 13.07 shall not be construed as a substitute for, or a waiver of, the provisions of any applicable statute of limitation or repose.

13.08 *Acceptance of Defective Work*

A. If, instead of requiring correction or removal and replacement of defective Work, Owner (and, prior to Engineer's recommendation of final payment, Engineer) prefers to accept it, Owner may do so. Contractor shall pay all claims, costs, losses, and damages (including

Copyright © 2007 National Society of Professional Engineers for EJCDC. All rights reserved.

but not limited to *all* fees and charges of engineers, architects, attorneys, and other professionals and all court or arbitration or other dispute resolution costs) attributable to Owner's evaluation of and determination to accept such defective Work (such costs to be approved by Engineer as to reasonableness) and for the diminished value of the Work to the extent not otherwise paid by Contractor pursuant to this sentence. If any such acceptance occurs prior to Engineer's recommendation of final payment, a Change Order will be issued incorporating the necessary revisions in the Contract Documents with respect to the Work, and Owner shall be entitled to an appropriate decrease in the Contract Price, reflecting the diminished value of Work so accepted. If the parties are unable to agree as to the amount thereof, Owner may make a Claim therefor as provided in Paragraph 10.05. If the acceptance occurs after such recommendation, an appropriate amount will be paid by Contractor to Owner.

13.09 *Owner May Correct Defective Work*

A. If Contractor fails within a reasonable time after written notice from Engineer to correct defective Work, or to remove and replace rejected Work as required by Engineer in accordance with Paragraph 13.06.A, or if Contractor fails to perform the Work in accordance with the Contract Documents, or if Contractor fails to comply with any other provision of the Contract Documents, Owner may, after seven days written notice to Contractor, correct, or remedy any such deficiency.

B. In exercising the rights and remedies under this Paragraph 13.09, Owner shall proceed expeditiously. In connection with such *corrective* or remedial action, Owner may exclude Contractor from all or part of the Site, take possession of all or part of the Work and suspend Contractor's services related thereto, take possession of Contractor's tools, appliances, construction equipment and machinery at the Site, and incorporate in the Work all materials and equipment stored at the Site or for which Owner has paid Contractor but which are stored elsewhere. Contractor shall allow Owner, Owner's representatives, agents and employees, Owner's other contractors, and Engineer and Engineer's consultants access to the Site to enable Owner to exercise the rights and remedies under this Paragraph.

C. All claims, costs, losses, and damages (including but not limited to all fees and charges of engineers, architects, attorneys, and other professionals and all court or arbitration or other dispute resolution costs) incurred or sustained by Owner in exercising the rights and remedies under this Paragraph 13.09 will be charged against Contractor, and a Change Order will be issued incorporating the necessary revisions in the Contract Documents with respect to the Work; and Owner shall be entitled to an appropriate decrease in the Contract Price. If the parties are unable to agree as to the amount of the adjustment, Owner may make a Claim therefor as provided in Paragraph 10.05. Such claims, costs, losses and damages will include but not be limited to all costs of repair, or replacement of work of others destroyed or damaged by correction, removal, or replacement of Contractor's defective Work.

D. Contractor shall not be allowed an extension of the Contract Times because of any delay in the performance of the Work *attributable* to the exercise by Owner of Owner's rights and remedies under this Paragraph 13.09.

ARTICLE 14 – PAYMENTS TO CONTRACTOR AND COMPLETION

14.01 *Schedule of Values*

A. The Schedule of Values established as provided in Paragraph 2.07.A will serve as the basis for progress payments and will be incorporated into a form of Application for Payment acceptable to Engineer. Progress payments on account of Unit Price Work will be based on the number of units completed.

14.02 *Progress Payments*

A. *Applications for Payments:*

1. At least 20 days before the date established in the Agreement for each progress payment (but not more often than once a month), Contractor shall submit to Engineer for review an Application for Payment filled out and signed by Contractor covering the Work completed as of the date of the Application and accompanied by such supporting documentation as is required by the Contract Documents. If payment is requested on the basis of materials and equipment not incorporated in the Work but delivered and suitably stored at the Site or at another location agreed to in writing, the Application for Payment shall also be accompanied by a bill of sale, invoice, or other documentation warranting that Owner has received the materials and equipment free and clear of all Liens and evidence that the materials and equipment are covered by appropriate property insurance or other arrangements to protect Owner's interest therein, all of which must be satisfactory to Owner.

2. Beginning with the second Application for Payment, each Application shall include an affidavit of Contractor stating that all previous progress payments received on account of the Work have been applied on account to discharge Contractor's legitimate obligations associated with prior Applications for Payment.

Copyright © 2007 National Society of Professional Engineers for EJCDC. All rights reserved.

3. The amount of retainage with respect to progress payments will be as stipulated in the Agreement.

B. *Review of Applications:*

1. Engineer will, within 10 days after receipt of each Application for Payment, either indicate in writing a recommendation of payment and present the Application to Owner or return the Application to Contractor indicating in writing Engineer's reasons for refusing to recommend payment. In the latter case, Contractor may make the necessary corrections and resubmit the Application.

2. Engineer's recommendation of any payment requested in an Application for Payment will constitute a representation by Engineer to Owner, based on Engineer's observations of the executed Work as an experienced and qualified design professional, and on Engineer's review of the Application for Payment and the accompanying data and schedules, that to the best of Engineer's knowledge, information and belief:

a. the Work has progressed to the point indicated;

b. the quality of the Work is generally in accordance with the Contract Documents (subject to an evaluation of the Work as a functioning whole prior to or upon Substantial Completion, the results of any subsequent tests called for in the Contract Documents, a final determination of quantities and classifications for Unit Price Work under Paragraph 9.07, and any other qualifications stated in the recommendation); and

c. the conditions precedent to Contractor's being entitled to such payment appear to have been fulfilled in so far as it is Engineer's responsibility to observe the Work.

3. By recommending any such payment Engineer will not thereby be deemed to have represented that:

a. inspections made to check the quality or the quantity of the Work as it has been performed have been exhaustive, extended to every aspect of the Work in progress, or involved detailed inspections of the Work beyond the responsibilities specifically assigned to Engineer in the Contract Documents; or

b. there may not be other matters or issues between the parties that might entitle Contractor to be paid additionally by Owner or entitle Owner to withhold payment to Contractor.

4. Neither Engineer's review of Contractor's Work for the purposes of recommending payments nor Engineer's recommendation of any payment, including final payment, will impose responsibility on Engineer:

a. to supervise, direct, or control the Work, or

b. for the means, methods, techniques, sequences, or procedures of construction, or the safety precautions and programs incident thereto, or

c. for Contractor's failure to comply with Laws and Regulations applicable to Contractor's performance of the Work, or

d. to make any examination to ascertain how or for what purposes Contractor has used the moneys paid on account of the Contract Price, or

e. to determine that title to any of the Work, materials, or equipment has passed to Owner free and clear of any Liens.

5. Engineer may refuse to recommend the whole or any part of any payment if, in Engineer's opinion, it would be incorrect to make the representations to Owner stated in Paragraph 14.02.B.2. Engineer may also refuse to recommend any such payment or, because of subsequently discovered evidence or the results of subsequent inspections or tests, revise or revoke any such payment recommendation previously made, to such extent as may be necessary in Engineer's opinion to protect Owner from loss because:

a. the Work is defective, or completed Work has been damaged, requiring correction or replacement;

b. the Contract Price has been reduced by Change Orders;

c. Owner has been required to correct defective Work or complete Work in accordance with Paragraph 13.09; or

d. Engineer has actual knowledge of the occurrence of any of the events enumerated in Paragraph 15.02.A.

C. *Payment Becomes Due:*

1. Ten days after presentation of the Application for Payment to Owner with Engineer's recommendation, the amount recommended will (subject to

Copyright © 2007 National Society of Professional Engineers for EJCDC. All rights reserved.

the provisions of Paragraph 14.02.D) become due, and when due will be paid by Owner to Contractor.

D. *Reduction in Payment:*

1. Owner may refuse to make payment of the full amount recommended by Engineer because:

a. claims have been made against Owner on account of Contractor's performance or furnishing of the Work;

b. Liens have been filed in connection with the Work, except where Contractor has delivered a specific bond satisfactory to Owner to secure the satisfaction and discharge of such Liens;

c. there are other items entitling Owner to a set-off against the amount recommended; or

d. Owner has actual knowledge of the occurrence of any of the events enumerated in Paragraphs 14.02.B.5.a through 14.02.B.5.c or Paragraph 15.02.A.

2. If Owner refuses to make payment of the full amount recommended by Engineer, Owner will give Contractor immediate written notice (with a copy to Engineer) stating the reasons for such action and promptly pay Contractor any amount remaining after deduction of the amount so withheld. Owner shall promptly pay Contractor the amount so withheld, or any adjustment thereto agreed to by Owner and Contractor, when Contractor remedies the reasons for such action.

3. Upon a subsequent determination that Owner's refusal of payment was not justified, the amount wrongfully withheld shall be treated as an amount due as determined by Paragraph 14.02.C.1 and subject to interest as provided in the Agreement.

14.03 *Contractor's Warranty of Title*

A. Contractor warrants and guarantees that title to all Work, materials, and equipment covered by any Application for Payment, whether incorporated in the Project or not, will pass to Owner no later than the time of payment free and clear of all Liens.

14.04 *Substantial Completion*

A. When Contractor considers the entire Work ready for its intended use Contractor shall notify Owner and Engineer in writing that the entire Work is substantially complete (except for items specifically listed by Contractor as incomplete) and request that Engineer issue a certificate of Substantial Completion.

B. Promptly after Contractor's notification, Owner, Contractor, and Engineer shall make an inspection of the Work to determine the status of completion. If Engineer does not consider the Work substantially complete, Engineer will notify Contractor in writing giving the reasons therefor.

C. If Engineer considers the Work substantially complete, Engineer will deliver to Owner a tentative certificate of *Substantial* Completion which shall fix the date of Substantial Completion. There shall be attached to the certificate a tentative list of items to be completed or corrected before final payment. Owner shall have seven days after receipt of the tentative certificate during which to make written objection to Engineer as to any provisions of the certificate or attached list. If, after considering such objections, Engineer concludes that the Work is not substantially complete, Engineer will, within 14 days after submission of the tentative certificate to Owner, notify Contractor in writing, stating the reasons therefor. If, after consideration of Owner's objections, Engineer considers the Work substantially complete, Engineer will, within said 14 days, execute and deliver to Owner and Contractor a definitive certificate of Substantial Completion (with a revised tentative list of items to be completed or corrected) reflecting such changes from the tentative certificate as Engineer believes justified after consideration of any objections from Owner.

D. At the time of delivery of the tentative certificate of Substantial Completion, Engineer will deliver to Owner and *Contractor* a written recommendation as to division of responsibilities pending final payment between Owner and Contractor with respect to security, operation, safety, and protection of the Work, maintenance, heat, utilities, insurance, and warranties and guarantees. Unless Owner and Contractor agree otherwise in writing and so inform Engineer in writing prior to Engineer's issuing the definitive certificate of Substantial Completion, Engineer's aforesaid recommendation will be binding on Owner and Contractor until final payment.

E. Owner shall have the right to exclude Contractor from the Site after the date of Substantial Completion subject to allowing Contractor reasonable access to remove its property and complete or correct items on the tentative list.

14.05 *Partial Utilization*

A. Prior to Substantial Completion of all the Work, Owner may use or occupy any substantially completed part of the Work which has specifically been

Copyright © 2007 National Society of Professional Engineers for EJCDC. All rights reserved.

identified in the Contract Documents, or which Owner, Engineer, and Contractor agree constitutes a separately functioning and *usable* part of the Work that can be used by Owner for its intended purpose without significant interference with Contractor's performance of the remainder of the Work, subject to the following conditions:

1. Owner at any time may request Contractor in writing to permit Owner to use or occupy any such part of the Work which Owner believes to be ready for its intended use and substantially complete. If and when Contractor agrees that such part of the Work is substantially complete, Contractor, Owner, and Engineer will follow the procedures of Paragraph 14.04.A through D for that part of the Work.

2. Contractor at any time may notify Owner and Engineer in writing that Contractor considers any such part of the Work ready for its intended use and substantially complete and request Engineer to issue a certificate of Substantial Completion for that part of the Work.

3. Within a reasonable time after either such request, Owner, Contractor, and Engineer shall make an inspection of that part of the Work to determine its status of completion. If Engineer does not consider that part of the Work to be substantially complete, Engineer will notify Owner and Contractor in writing giving the reasons therefor. If Engineer considers that part of the Work to be substantially complete, the provisions of Paragraph 14.04 will apply with respect to certification of Substantial Completion of that part of the Work and the division of responsibility in respect thereof and access thereto.

4. No use or occupancy or separate operation of part of the Work may occur prior to compliance with the requirements of Paragraph 5.10 regarding property insurance.

14.06 *Final Inspection*

A. Upon written notice from Contractor that the entire Work or an agreed portion thereof is complete, Engineer will promptly make a final inspection with Owner and Contractor and will notify Contractor in writing of all particulars in which this inspection reveals that the Work is incomplete or defective. Contractor shall immediately take such measures as are necessary to complete such Work or remedy such deficiencies.

14.07 *Final Payment*

A. *Application for Payment:*

1. After Contractor has, in the opinion of Engineer, satisfactorily completed all corrections identified during the final inspection and has delivered, in accordance with the Contract Documents, all maintenance and operating instructions, schedules, guarantees, bonds, certificates or other evidence of insurance, certificates of inspection, marked-up record documents (as provided in Paragraph 6.12), and other documents, Contractor may make application for final payment following the procedure for progress payments.

2. The final Application for Payment shall be accompanied (except as previously delivered) by:

a. all documentation called for in the Contract Documents, including but not limited to the evidence of insurance required by Paragraph 5.04.B.6;

b. consent of the surety, if any, to final payment;

c. a list of all Claims against Owner that Contractor believes are unsettled; and

d. complete and legally effective releases or waivers (satisfactory to Owner) of all Lien rights arising out of or Liens filed in connection with the Work.

3. In lieu of the releases or waivers of Liens specified in Paragraph 14.07.A.2 and as approved by Owner, Contractor may furnish receipts or releases in full and an affidavit of Contractor that: (i) the releases and receipts include all labor, services, material, and equipment for which a Lien could be filed; and (ii) all payrolls, material and equipment bills, and other indebtedness connected with the Work for which Owner might in any way be responsible, or which might in any way result in liens or other burdens on Owner's property, have been paid or otherwise satisfied. If any Subcontractor or Supplier fails to furnish such a release or receipt in full, Contractor may furnish a bond or other collateral satisfactory to Owner to indemnify Owner against any Lien.

B. *Engineer's Review of Application and Acceptance:*

1. If, on the basis of Engineer's observation of the Work during construction and final inspection, and Engineer's review of the final Application for Payment and accompanying documentation as required by the Contract Documents, Engineer is satisfied that the Work has been completed and Contractor's other obligations under the Contract Documents have been fulfilled, Engineer will, within ten days after receipt of the final Application for Payment, indicate in writing Engineer's recommendation of payment and present the Application for Payment to Owner for payment. At the same time Engineer will also give

Copyright © 2007 National Society of Professional Engineers for EJCDC. All rights reserved.

written notice to Owner and Contractor that the Work is acceptable subject to the provisions of Paragraph 14.09. Otherwise, Engineer will return the Application for Payment to Contractor, indicating in writing the reasons for refusing to recommend final payment, in which case Contractor shall make the necessary corrections and resubmit the Application for Payment.

C. *Payment Becomes Due:*

1. Thirty days after the presentation to Owner of the Application for Payment and accompanying documentation, the amount recommended by Engineer, less any sum Owner is entitled to set off against Engineer's recommendation, including but not limited to liquidated damages, will become due and will be paid by Owner to Contractor.

14.08 *Final Completion Delayed*

A. If, through no fault of Contractor, final completion of the Work is significantly delayed, and if Engineer so confirms, Owner shall, upon receipt of Contractor's final Application for Payment (for Work fully completed and accepted) and recommendation of Engineer, and without terminating the Contract, make payment of the balance due for that portion of the Work fully completed and accepted. If the remaining balance to be held by Owner for Work not fully completed or corrected is less than the retainage stipulated in the Agreement, and if bonds have been furnished as required in Paragraph 5.01, the written consent of the surety to the payment of the balance due for that portion of the Work fully completed and accepted shall be submitted by Contractor to Engineer with the Application for such payment. Such payment shall be made under the terms and conditions governing final payment, except that it shall not constitute a waiver of Claims.

14.09 *Waiver of Claims*

A. The *making* and acceptance of final payment will constitute:

1. a waiver of all Claims by Owner against Contractor, except Claims arising from unsettled Liens, from defective Work appearing after final inspection pursuant to Paragraph 14.06, from failure to comply with the Contract Documents or the terms of any special guarantees specified therein, or from Contractor's continuing obligations under the Contract Documents; and

2. a waiver of all Claims by Contractor against Owner other than those previously made in accordance with the requirements herein and expressly acknowledged by Owner in writing as still unsettled.

ARTICLE 15 – SUSPENSION OF WORK AND TERMINATION

15.01 *Owner May Suspend Work*

A. At any time and without cause, Owner may suspend the Work or any portion thereof for a period of not more than 90 consecutive days by notice in writing to Contractor and Engineer which will fix the date on which Work will be resumed. Contractor shall resume the Work on the date so fixed. Contractor shall be granted an adjustment in the Contract Price or an extension of the Contract Times, or both, directly attributable to any such suspension if Contractor makes a Claim therefor as provided in Paragraph 10.05.

15.02 *Owner May Terminate for Cause*

A. The *occurrence* of any one or more of the following events will justify termination for cause:

1. Contractor's persistent failure to perform the Work in accordance with the Contract Documents (including, but not limited to, failure to supply sufficient skilled workers or suitable materials or equipment or failure to adhere to the Progress Schedule established under Paragraph 2.07 as adjusted from time to time pursuant to Paragraph 6.04);

2. Contractor's disregard of Laws or Regulations of any public body having jurisdiction;

3. Contractor's repeated disregard of the authority of Engineer; or

4. Contractor's violation in any substantial way of any provisions of the Contract Documents.

B. If one or more of the events identified in Paragraph 15.02.A occur, Owner may, after giving Contractor (and surety) seven days written notice of its intent to terminate the services of Contractor:

1. exclude Contractor from the Site, and take possession of the Work and of all Contractor's tools, appliances, construction equipment, and machinery at the Site, and use the same to the full extent they could be used by Contractor (without liability to Contractor for trespass or conversion);

2. incorporate in the Work all materials and equipment stored at the Site or for which Owner has paid Contractor but which are stored elsewhere; and

3. complete the Work as Owner may deem expedient.

Copyright © 2007 National Society of Professional Engineers for EJCDC. All rights reserved.

C. If Owner proceeds as provided in Paragraph 15.02.B, Contractor shall not be entitled to receive any further payment until the Work is completed. If the unpaid balance of the Contract Price exceeds all claims, costs, losses, and damages (including but not limited to all fees and charges *of* engineers, architects, attorneys, and other professionals and all court or arbitration or other dispute resolution costs) sustained by Owner arising out of or relating to completing the Work, such excess will be paid to Contractor. If such claims, costs, losses, and damages exceed such unpaid balance, Contractor shall pay the difference to Owner. Such claims, costs, losses, and damages incurred by Owner will be reviewed by Engineer as to their reasonableness and, when so approved by Engineer, incorporated in a Change Order. When exercising any rights or remedies under this Paragraph, Owner shall not be required to obtain the lowest price for the Work performed.

D. Notwithstanding Paragraphs 15.02.B and 15.02.C, Contractor's services will not be terminated if Contractor begins within seven days of receipt of notice of intent to terminate to correct its failure to perform and proceeds diligently to cure such failure within no more than 30 days of receipt of said notice.

E. Where Contractor's services have been so terminated by Owner, the termination will not affect any rights or remedies of Owner against Contractor then existing or which may thereafter accrue. Any retention or payment of moneys due Contractor by Owner will not release Contractor from liability.

F. If and to the extent that Contractor has provided a *performance* bond under the provisions of Paragraph 5.01.A, the termination procedures of that bond shall supersede the provisions of Paragraphs 15.02.B and 15.02.C.

15.03 *Owner May Terminate For Convenience*

A. Upon seven days written notice to Contractor and Engineer, Owner may, without cause and without prejudice to any other *right* or remedy of Owner, terminate the Contract. In such case, Contractor shall be paid for (without duplication of any items):

1. completed and acceptable Work executed in accordance with the Contract Documents prior to the effective date of termination, including fair and reasonable sums for overhead and profit on such Work;

2. expenses sustained prior to the effective date of termination in performing services and furnishing labor, materials, or equipment as required by the Contract Documents in connection with uncompleted Work, plus fair and reasonable sums for overhead and profit on such expenses;

3. all claims, costs, losses, and damages (including but not limited to all fees and charges of engineers, architects, attorneys, and other professionals and all court or arbitration or other dispute resolution costs) incurred in settlement of terminated contracts with Subcontractors, Suppliers, and others; and

4. reasonable expenses directly attributable to termination.

B. Contractor shall not be paid on account of loss of *anticipated* profits or revenue or other economic loss arising out of or resulting from such termination.

15.04 *Contractor May Stop Work or Terminate*

A. If, through no act or fault of Contractor, (i) the Work is suspended for more than 90 consecutive days by Owner or under an order of court or other public authority, or (ii) Engineer *fails* to act on any Application for Payment within 30 days after it is submitted, or (iii) Owner fails for 30 days to pay Contractor any sum finally determined to be due, then Contractor may, upon seven days written notice to Owner and Engineer, and provided Owner or Engineer do not remedy such suspension or failure within that time, terminate the Contract and recover from Owner payment on the same terms as provided in Paragraph 15.03.

B. In lieu of terminating the Contract and without prejudice to any other right or remedy, if Engineer has failed to act on an Application for Payment within 30 days after it is submitted, or Owner has failed for 30 days to pay Contractor any sum finally determined to be due, Contractor may, seven *days* after written notice to Owner and Engineer, stop the Work until payment is made of all such amounts due Contractor, including interest thereon. The provisions of this Paragraph 15.04 are not intended to preclude Contractor from making a Claim under Paragraph 10.05 for an adjustment in Contract Price or Contract Times or otherwise for expenses or damage directly attributable to Contractor's stopping the Work as permitted by this Paragraph.

ARTICLE 16 – DISPUTE RESOLUTION

16.01 *Methods and Procedures*

A. Either Owner or Contractor may request mediation of any Claim submitted to Engineer for a decision under Paragraph 10.05 before such decision becomes final and binding. The mediation will be governed by the Construction Industry Mediation Rules of the

Copyright © 2007 National Society of Professional Engineers for EJCDC. All rights reserved.

American Arbitration *Association* in effect as of the Effective Date of the Agreement. The request for mediation shall be submitted in writing to the American Arbitration Association and the other party to the Contract. Timely submission of the request shall stay the effect of Paragraph 10.05.E.

B. Owner and Contractor shall participate in the mediation process in good faith. The process shall be concluded within 60 days of filing of the request. The date of termination of the mediation shall be determined by application of the mediation rules referenced above.

C. If the Claim is not resolved by mediation, Engineer's action under Paragraph 10.05.C or a denial pursuant to Paragraphs 10.05.C.3 or 10.05.D shall become final and binding 30 days after termination of the mediation unless, within that time period, Owner or Contractor:

1. elects in writing to invoke any dispute resolution process provided for in the Supplementary Conditions; or

2. agrees with the other party to submit the Claim to another dispute resolution process; or

3. gives written notice to the other party of the intent to submit the Claim to a court of competent jurisdiction.

ARTICLE 17 – MISCELLANEOUS

17.01 *Giving Notice*

A. Whenever any provision of the Contract Documents requires the giving of written notice, it will be deemed to have been *validly* given if:

1. delivered in person to the individual or to a member of the firm or to an officer of the corporation for whom it is intended; or

2. delivered at or sent by registered or certified mail, postage prepaid, to the last business address known to the giver of the notice.

17.02 *Computation of Times*

A. When any period of time is referred to in the Contract Documents by days, it will be computed to exclude the first and include the last day of such period. If the last day of any such period *falls* on a Saturday or Sunday or on a day made a legal holiday by the law of the applicable jurisdiction, such day will be omitted from the computation.

17.03 *Cumulative Remedies*

A. The duties and obligations imposed by these General Conditions and the rights and remedies available hereunder to the parties hereto are in addition to, and are not to be construed in any way as a limitation of, any rights and remedies available to any or all of them which are otherwise imposed or available by Laws or Regulations, by special warranty or guarantee, or by other provisions of the Contract Documents. The provisions of this Paragraph will be as effective as if repeated specifically in the Contract Documents in connection with each particular duty, obligation, right, and remedy to which they apply.

17.04 *Survival of Obligations*

A. All representations, indemnifications, warranties, and guarantees made in, required by, or given in accordance with *the* Contract Documents, as well as all continuing obligations indicated in the Contract Documents, will survive final payment, completion, and acceptance of the Work or termination or completion of the Contract or termination of the services of Contractor.

17.05 *Controlling Law*

A. This Contract is to be governed by the law of the state in which the Project is located.

17.06 *Headings*

A. Article and paragraph headings are inserted for convenience only and do not constitute parts of these General *Conditions.*

Copyright © 2007 National Society of Professional Engineers for EJCDC. All rights reserved.

SUPPLEMENTARY CONDITIONS OF THE CONSTRUCTION CONTRACT

Prepared by

Compton Engineering, Inc.

for

CITY OF WAVELAND

TABLE OF CONTENTS

Page

GENERAL 4
SPECIFIC COMMENTS 4
ARTICLE 1 – DEFINITIONS AND TERMINOLOGY 4
SC-1.01.A.19 Engineer 4
SC-1.01.A.29 Owner 4
SC-1.01.A.45 Substantial Completion 4
ARTICLE 2 – PRELIMINARY MATTERS 4
SC-2.02 Copies of Documents 4
SC-2.03 Commencement of Contract Times; Notice to Proceed 4
SC-2.07 Initial Acceptance of Schedules 4
SC-2.08 Narrative Report Outline 5
ARTICLE 3 – CONTRACT DOCUMENTS: INTENT, AMENDING, REUSE 5
SC-3.03.B Resolving Discrepancies 5
ARTICLE 4 – AVAILIBILTY OF LANDS; SUBSURFACE AND PHYSICAL CONDITIONS; HAZARDOUS ENVIRONMENTAL CONDITIONS; REEFERENCE POINTS 5
SC-4.02 Subsurface and Physical Conditions 5
SC-4.02.C Site Surveys 5
SC-4.05 Reference Points 5
SC-4.06 Hazardous Environmental Conditions at Site 5
SC-4.07 Site Investigation and Representation 5
ARTICLE 5 – BONDS AND INSURANCE 6
SC-5.03 Certificates of Insurance 6
SC-5.04 Contractor's Liability Insurance 6
SC-5.06.A Property Insurance 7
SC-5.06.B (Boiler, Machinery and Other Property Insurance) 8
SC-5.06.E (Contractor's Special Insurance) 8
SC-5.11 Additional Insured 8
ARTICLE 6 – CONTRACTOR'S RESPONSIBILITY 8
SC-6.06 Concerning Subcontractors, Suppliers, and Others 8
SC-6.12 Record Documents 8
SC-6.17 Shop Drawings and Samples 8
SC-6.19 Contractor's General Warrantee and Guarantee 8
ARTICLE 7 – OTHER WORK AT SITE 9
SC-7.04 Claims Between Contractors 9
ARTICLE 8 – OWNER'S RESPONSIBLITIES 9
SC-8.11 Evidence of Financial Arrangements 9
ARTICLE 9 – ENGINEER'S STATUS DURING CONSTRUCTION 9
SC-9.03 Project Representative 9
ARTICLE 10 – CHANGES IN THE WORK; CLAIMS 9
ARTICLE 11 – COST OF THE WORK; ALLOWANCES; UNIT PRICE WORK 9
SC-11.03.D (Claim for Adjustment in the Contract Price) 10
ARTICLE 12 – CHANGE OF CONTRACT PRICE: CHANGE OF CONTRACT TIMES 10
SC-12.03 Rain Days 10
ARTICLE 13 – TESTS AND INSPECTIONS; CORRECTIONS, REMOVAL OR ACCEPTANCE OF DEFECTIVE WORK 10
SC-13.03.A (Timely Notice) 10
ARTICLE 14 – PAYMENTS TO CONTRACTOR AND COMPLETION 10
SC-14.02.A.3 Applications for Payments 11
SC-14.02.C Payment Becomes Due 10
SC-14.07.C.1 Payment Becomes Due 10

ARTICLE 15 – SUSPENSION OF WORK AND TERMINATION 11
ARTICLE 16 – DISPUTE RESOLUTION 11
ARTICLE 17 – MISCELLANEOUS 12
SC-17.05 Controlling Law 12

SUPPLEMENTARY CONDITIONS

Prepared for City of Waveland

GENERAL

These Supplementary Conditions amend or supplement the Standard General Conditions of the Construction Contract (No. C-700, 2007 Edition) and other provisions of the Contract Documents as indicated below. All provisions that are not so amended or supplemented remain in full force and effect.

The terms used in these Supplementary Conditions have the meanings stated in the General Conditions. Additional terms used in these Supplementary Conditions have the same meanings stated below, which are applicable to both the singular and plural thereof.

The Contractor's attention is directed to Division 1, GENERAL REQUIREMENTS, which contains other directions pertinent to the project.

SPECIFIC COMMENTS

ARTICLE 1 – DEFINITIONS AND TERMINOLOGY

SC-1.01.A.19. ***Engineer*** -- ADD the following language at the end of the last sentence in Paragraph 1.01.A.19:

Wherever in these Contract Documents the word "Architect", "Engineer", "E/A" or "A/E" appears, it shall be understood to mean the Architect or Engineer, (Compton Engineering, Inc.) and their authorized representatives, acting either directly or indirectly as authorized agents of the Owner.

SC-1.01.A.29. ***Owner*** -- ADD the following language at the end of the last sentence in Paragraph 1.01.A.29:

Whenever in these Contract Documents the word "Owner" appears, it shall be understood to mean the City of Waveland and their authorized representatives.

SC-1.01.A.44. ***Substantial Completion*** – AMEND the language in the first sentence of Paragraph 1.01.A.44 to read as follows:

CHANGE the language from "in the opinion of Engineer," to "in the opinion of the Engineer and Owner,"

ARTICLE 2 – PRELIMINARY MATTERS

SC-2.02 ***Copies of Documents*** AMEND the language in the first sentence in Paragraph 2.02.A to read as follows:

CHANGE the language from "up to ten" to "up to three unless otherwise noted in Article 4".

SC-2.03 ***Commencement of Contract Times; Notice to Proceed*** AMEND the language in the third sentence in Paragraph 2.03.A to read as follows:

CHANGE the language from "later than the sixtieth day" to "later than the ninetieth day".

SC-2.07 ***Initial Acceptance of Schedules*** ADD the following new language at the end of Paragraph 2.07.A.2:

The requirements for specification Section 01300 - Submittals During Construction shall also be met prior to accepting the Schedule of Submittals.

SC-2.08 ***Narrative Report Outline*** ADD the following new paragraph immediately following Paragraph 2.07:

SC-2.08 A narrative report as outlined in Specification section 01311 shall be required and shall accompany all Payment Applications prior to approval.

ARTICLE 3 – CONTRACT DOCUMENTS: INTENT, AMENDING, REUSE

SC-3.03.B ***Resolving Discrepancies*** ADD the following new language at the end of this section:

d. Whenever the Contract Documents contain contradictions or discrepancies within the document, the most costly means or method shall be applied.

ARTICLE 4 – AVAILABILITY OF LANDS; SUBSURFACE AND PHYSICAL CONDITIONS; HAZARDOUS ENVIRONMENTAL CONDITIONS; REFERENCE POINTS

SC-4.02 ***Subsurface and Physical Conditions*** DELETE Paragraphs 4.02.A and 4.02.B in their entirety and INSERT the following in their place:

A. No reports or explorations or tests of subsurface conditions at or contiguous to the Site are known to the Owner or Engineer.

B. Not Used.

SC-4.02.C ***Site Surveys*** ADD the following new paragraph immediately after Paragraph 4.02.B:

C. *Site Surveys:* Site survey information, if provided, has been compiled from past records and limited field investigations and although stated with as much accuracy as possible, may contain errors or discrepancies. Contractor shall perform investigations as necessary to accomplish the Work. Any unknown item encountered that impacts the Work shall be handled under Article 4.03.

SC-4.05 ***Reference Points*** AMEND the language in the second sentence of Paragraph 4.05.A to read as follows:

CHANGE the language from "without prior written approval of Owner" to "without prior written approval of Owner and Engineer".

SC-4.06 ***Hazardous Environmental Conditions at Site*** DELETE Paragraphs 4.06.A and 4.06.B in their entirety and INSERT the following in their place:

A. No reports or drawings of hazardous conditions at the site are known to the Owner or Engineer.

B. Not used.

SC-4.07 ***Site Investigation and Representation*** ADD the following new paragraph immediately after Paragraph 4.06:

SC-4.07 *Site Investigation and Representation*

The Contractor acknowledges that he has satisfied himself as to the nature and location of the Work; the general and local conditions, particularly those bearing upon availability of transportation, disposal, handling and storage of materials; availability of labor, water, electric power, and roads; uncertainties of weather, river stages, or similar physical conditions at the site; the conformation and conditions of the ground; the character of equipment and facilities needed preliminary to and during the prosecution of the work; and all other matters which can in any affect the Work or the cost thereof under this Contract. The Contractor further acknowledges that he has satisfied himself as to the character, quality, and quantity of surface and subsurface materials and groundwater to be encountered from inspecting the site. Any failure by the Contractor to acquaint himself with all the available information will not relieve him from responsibility for properly estimating the difficulty or cost of successfully performing the Work. Neither the Owner nor the Engineer assumes responsibility for any

conclusion or interpretation made by the Contractor.

ARTICLE 5 – BONDS AND INSURANCE

SC-5.03 *Certificates of Insurance* ADD the following new paragraph immediately after Paragraph 5.03.E:

F. The Contractor shall be required to submit a Certificate of Insurance with every pay application; or, no later than every thirty (30) days for the term of contract. If an approved Certificate of Insurance is not included with the pay application, then it will be considered non-compliant with the contract documents and returned to the Contractor.

SC-5.04 *Contractor's Liability Insurance* ADD the following new paragraph immediately after Paragraph 5.04.B:

C. The limits of liability for the insurance required by Paragraph 5.04 of the General Conditions shall provide coverages for not less than the following amounts or greater where required by Laws and Regulations:

1. Worker's Compensation, and related coverage under Paragraph 5.04.A.1 and A.2 of the General Conditions:

a.	State:	Statutory
b.	Applicable Federal:	Statutory (e.g. Longshoreman's)
c.	Employer's Liability:	$100,000 or Statutory

2. Contractor's General Liability under Paragraph 5.04.A.3 through A.6 of the General Conditions which shall include completed operations and product liability coverages and eliminate the exclusion with respect to property under the care, custody and control of Contractor:

a.	General Aggregate:	$ 1,000,000.00
b.	Products- Completed Operations Aggregate	$ 1,000,000.00
c.	Personal and Advertising Injury	$ 1,000,000.00
d.	Each Occurrence (Bodily Injury and Property Damage)	$ 1,000,000.00

e. Property Damage liability insurance will provide Explosion, Collapse and Under-ground coverages where applicable.

f. Excess or Umbrella Liability

1)	General Aggregate	$ 1,000,000.00
2)	Each Occurrence	$ 1,000,000.00

3. Automobile Liability under Paragraph 5.04.A.6 of the General Conditions:

a.	Bodily Injury:	
	Each Person	$ 1,000,000.00
	Each Accident	$ 1,000,000.00

b. Property Damage:
Each Accident $ 1,000,000.00

c. Combined Single:
Limit of $ 1,000,000.00

4. The Contractual Liability coverage required by Paragraph 5.04.B.4 of the General Conditions shall provide coverage for not less than the following amounts:

a. Bodily Injury:
Each Person $ 1,000,000.00
Annual Aggregate $ 1,000,000.00

b. Property Damage:
Each Accident $ 1,000,000.00
Annual Aggregate $ 1,000,000.00

5. The list of names, other persons, or entities to be included on the policy as additional insured are as per Paragraph 5.11.

SC-5.06.A ***Property Insurance*** DELETE Paragraph 5.06.A in its entirety and INSERT the following in its place:

A. When available, Contractor shall purchase and maintain property insurance upon the Work at the Site in the amount of the full replacement cost thereof.

1. This insurance shall:

a. include the interests of Owner, Contractor, Subcontractors, Engineer and any other individuals or entities identified herein, and the officers, directors, partners, employees, agents and other consultants and subcontractors of any of them each of whom is deemed to have an insurable interest and shall be listed as an insured or additional insured;

b. in addition to the individuals and entities specified, include additional insured per Paragraph 5.11.

c. be written on a Builder's Risk "all-risk" or open peril or special causes of loss policy form that shall at least include insurance for physical loss and damage to the Work, temporary buildings, falsework, and materials and equipment in transit and shall insure against at least the following perils or causes of loss: fire, lightning, extended coverage, theft, vandalism and malicious mischief, earthquake, collapse, debris removal, demolition occasioned by enforcement of Laws and Regulations, water damage (other than that caused by flood), and such other perils or causes of loss as may be specifically required by the Supplementary Conditions;

d. include expenses incurred in the repair or replacement of any insured property (including but not limited to fees and charges of engineers and architects);

e. cover materials and equipment stored at the Site or at another location that was agreed to in writing by Owner prior to being incorporated in the Work, provided that such materials and equipment have been included in an Application for Payment recommended by Engineer;

f. allow for partial utilization of the Work by Owner;

g. include testing and startup; and

h. be maintained in effect until final payment is made unless otherwise agreed to in writing by Owner, Contractor and Engineer with 30 days written notice to each other additional insured to whom a certificate of insurance has been issued.

2. Contractor shall be responsible for any deductible or self-insured retention.

3. The policies of insurance required to be purchased and maintained by Contractor in accordance with this Paragraph SC-5.06.A shall comply with the requirements of paragraph 5.06.C of the General Conditions.

SC-5.06.B DELETE this article in its entirety.

SC-5.06.E DELETE this Paragraph in its entirety.

SC-5.11 ***Additional Insured*** ADD the following new paragraph immediately after Paragraph 5.10.

SC- 5.11 *Additional Insured*

A. Where applicable, all insurance policies shall name the Owner and Engineer as herein before defined as additional insured.

ARTICLE 6 – CONTRACTOR'S RESPONSIBILITY

SC-6.06 ***Concerning Subcontractor's, Suppliers, and Others*** ADD a new paragraph immediately after Paragraph 6.06.G:

H. Owner or Engineer may furnish to any Subcontractor or Supplier, to the extent practicable, information about amounts paid to Contractor on Work performed for Contractor by a particular Subcontractor or Supplier.

SC-6.12 ***Record Documents*** ADD a new paragraph immediately after Paragraph 6.12.A:

B. Owner may withhold progress payments until record documents are properly updated. Final payment may not be made until all record documents are accepted in writing by Owner.

SC-6.17 ***Shop Drawings and Samples*** ADD the following new paragraphs immediately after Paragraph 6.17.E:

F. Contractor shall furnish required submittals with sufficient information and accuracy in order to obtain required approval of an item with no more than three submittals. Engineer will record Engineer's time for reviewing subsequent submittals of Shop Drawings, samples or other items requiring approval and Contractor shall reimburse Owner for Engineer's charges for such time.

G. In the event that Contractor requests a substitution for a previously approved item, Contractor shall reimburse Owner for Engineer's charges for such time unless the need for such substitution is beyond the control of Contractor.

SC-6.19 ***Contractor's General Warranty and Guarantee*** ADD the following new paragraph immediately after Paragraph 6.19.C:

D. Unless additional warranties are included in the technical specifications, the Contractor shall guarantee all Work for a period of one-year following Substantial Completion.

ARTICLE 7 – OTHER WORK AT SITE

SC-7.04 *Claims Between Contractors* ADD a new paragraph immediately after Paragraph 7.03:

SC-7.04 *Claims Between Contractors*

A. Should Contractor cause damage to the work or property of any other contractor at the Site, or should any claim arising out of Contractor's performance of the Work at the Site be made by any other contractor against Contractor, Owner, Engineer, or the construction coordinator, Contractor shall promptly attempt to settle with such other contractor by agreement, or to otherwise resolve the dispute by arbitration or at law.

B. Contractor shall, to the fullest extent permitted by Laws and Regulations, indemnify and hold harmless Owner, Engineer, the construction coordinator and the officers, directors, partners, employees, agents and other consultants and subcontractors of each and any of them from and against all claims, costs, losses and damages (including, but not limited to, fees and charges of engineers, architects, attorneys, and other professionals and court and arbitration costs) arising directly, indirectly or consequentially out of any action, legal or equitable, brought by any other contractor against Owner, Engineer, Engineer's Consultants, or the construction coordinator to the extent said claim is based on or arises out of Contractor's performance of the Work. Should another contractor cause damage to the Work or property of Contractor or should the performance of work by any other contractor at the Site give rise to any other Claim, Contractor shall not institute any action, legal or equitable, against Owner, Engineer, or the construction coordinator or permit any action against any of them to be maintained and continued in its name or for its benefit in any court or before any arbiter which seeks to impose liability on or to recover damages from Owner, Engineer, or the construction coordinator on account of any such damage or Claim.

C. If Contractor is delayed at any time in performing or furnishing Work by any act or neglect of another contractor, and Owner and Contractor are unable to agree as to the extent of any adjustment in Contract Times attributable thereto, Contractor may make a Claim for an extension of times in accordance with Article 12. An extension of the Contract Times shall be Contractor's exclusive remedy with respect to Owner, Engineer, and construction coordinator for any delay, disruption, interference, or hindrance caused by any other contractor. This paragraph does not prevent recovery from Owner, Engineer, or construction coordinator for activities that are their respective responsibilities.

ARTICLE 8 – OWNER'S RESPONSIBLITIES

SC-8.11 *Evidence of Financial Arrangements* Add the following new paragraph immediately after Paragraph 8.11.A:

B. On request of Contractor prior to the execution of any Change Order involving a significant increase in the Contract Price, Owner shall furnish to Contractor reasonable evidence that adequate financial arrangements have been made by Owner to enable Owner to fulfill the increased financial obligations to be undertaken by Owner as a result of such Change Order.

ARTICLE 9 – ENGINEER'S STATUS DURING CONSTRUCTION

SC-9.03 *Project Representative* AMEND the language in the second sentence of Paragraph 9.03.A to read as follows:

DELETE the language "the Supplementary Conditions, and limitations on the responsibilities thereof will be as provided in".

ARTICLE 10 – CHANGES IN THE WORK; CLAIMS

No Comment.

ARTICLE 11 – COST OF THE WORK; ALLOWANCES; UNIT PRICE WORK

SC-11.03.D *Unit Price Work* DELETE Paragraph 11.03.D in its entirety and INSERT the following in its place:

D. The unit price of an item of Unit Price Work shall be subject to reevaluation and adjustment under the following conditions:

1. if the Bid price of a particular item of Unit Price Work amounts to five percent (5%) or more of the Contract Price and the variation in the quantity of that particular item of Unit Price Work performed by Contractor differs by more than twenty-five percent (25%) from the estimated quantity of such item indicated in the Agreement; and

2. if there is no corresponding adjustment with respect to any other item of Work; and
3. if Contractor believes that Contractor has incurred additional expense as a result thereof or if Owner believes that the quantity variation entitles Owner to an adjustment in the unit price, either Owner or Contractor may make a Claim for an adjustment in the Contract Price in accordance with Article 10 if the parties are unable to agree as to the effect of any such variations in the quantity of Unit Price Work performed.

ARTICLE 12–CHANGE OF CONTRACT PREICE: CHANGE OF CONTRACT TIMES

ADD SC-12.03 Rain Days

F. The contractor shall include in the time of construction the following number of rain days for each month listed below in the schedule.

January	8 days
February	8 days
March	7 days
April	7 days
May	7 days
June	7 days
July	9 days
August	8 days
September	9 days
October	6 days
November	6 days
December	9 days

G. The engineer will grant a time extension for every workday when precipitation amount to ½" of more exceeds the number of days on the above chart and weather reduces production to less than 5 hours on items of work on the critical path. As part of the current and approved schedule from contractor schedules that are not current, updated and approved by Engineer will be reason for refusal of any additional time extension.

H. For an extension of time for rain days to be considered, the contractor must document that he had only exterior work with no interior work delayed due to inclement weather conditions. Requests for rain days must be submitted with the pay application for that time period.

ARTICLE 13 – TESTS AND INSPECTIONS; CORRECTIONS, REMOVAL OR ACCEPTANCE OF DEFECTIVE WORK

SC-13.03.A ADD the following new sentence immediately after the first sentence of Paragraph 13.03.A:

Timely notice shall be as stated in the appropriate specification and no less than 24 hours prior to scheduling the Work.

ARTICLE 14 – PAYMENTS TO CONTRACTOR AND COMPLETION

SC-14.02.A.3 *Applications for Payments* DELETE Paragraph 14.02.A.3 in its entirety and INSERT the following in its place:

3. The Owner will retain 5% of the amount of each estimate until final completion of the project. On monthly estimates subsequent to the first estimate submitted that includes invoices for stored materials for which payment to the Contractor has been made, there shall be a signed statement that the invoices have been paid by the Contractor.

   The statement shall read as follows:

   This is to certify that payment has been made for invoiced materials included in previous monthly estimate no._____ thru _____.

   Signed: _____

   In the event that such statement is not furnished or the manufacturers or material suppliers notify the Owner in writing that they have not been paid for materials included on previous estimates, the Owner may reduce payment in accordance with Paragraph 14.02.

SC-14.02.C *Payment Becomes Due* AMEND the language in the first sentence of Paragraph 14.02.C.1 to read as follows:

CHANGE the language from "Ten days after presentation of the Application for Payment to Owner," to "Ten days after approval of the Application for Payment by Owner".

SC-14.07.C.1 *Payment Becomes Due* AMEND the language in the first sentence of Paragraph 14.07.C.1 to read as follows:

CHANGE the language from "Thirty days" to "Sixty days"

ARTICLE 15 – SUSPENSION OF WORK AND TERMINATION

No comment.

ARTICLE 16 – DISPUTE RESOLUTION

SC-16.01 Delete Paragraph 16.01 in its entirety and insert the following in its place:

SC-16.01 Meet to Confer and Negotiate

A. Engineer's action under Paragraph 10.05.C or a denial pursuant to Paragraphs 10.05.C.3 or 10.05.D shall become final and binding 30 days after receipt of written notice of Engineer's action or decision unless, within that time period, Owner or Contractor gives to the other party written notice of intent to submit the Claim to a process of bilateral negotiations as set forth below.

B. Within 30 days of the delivery of such notice, Owner and Contractor shall meet and confer regarding the Claim. A good-faith effort to negotiate resolution shall be made by both parties.

C. If the negotiations contemplated by Paragraph SC-16.01.B are unsuccessful, management representatives of Owner and Contractor at least one tier above the individuals who met under SC-16.01.B shall meet, confer, and negotiate within 30 days of the closure of the unsuccessful negotiations.

D. If the Claim is not resolved by negotiation, Engineer's action under Paragraph 10.05.C or a denial pursuant to Paragraphs 10.05.C.3 or 10.05.D shall become final and binding 30 days after termination of the negotiations unless, within that time period, Owner or Contractor:

1. gives to the other party written notice of intent to submit the Claim to a court of competent jurisdiction, or

2. agrees with the other party to submit the Claim to another dispute resolution process.

E. Notwithstanding any applicable statute of limitations, a party giving notice under Paragraph SC-16.01.D.1 shall commence an action on the Claim within one year of giving such notice. Failure to do so shall result in the Claim being time-barred and Engineer's action or denial shall become final and binding.

ARTICLE 17 – MISCELLANEOUS

SC-17.05 ***Controlling Law*** DELETE Paragraph 17.05.A in its entirety and INSERT the following in its place:

A. The terms and conditions of this Contract shall be construed and interpreted under, and all respective rights and duties shall be governed by, the laws of the State of Mississippi. Wherever applicable, each provision of these Contract Documents shall be interpreted in such a manner as to be effective and valid under applicable law, but if any provision of these Contract Documents shall be prohibited by or invalid under applicable law, such provisions shall be ineffective to the extent of such prohibition or invalidity, without invalidating the remainder of such provision or the remaining provisions of these Contract Documents.

B. This Contract shall not be construed more strictly against one party than the other merely by virtue of the fact that it may have been prepared by one of the parties.

SPECIAL CONDITIONS

1. CONTRACTOR SHALL MAKE EVERY EFFORT TO UTILIZE LOCAL SUBCONTRACTORS, LABOR, VENDORS, AND SUPPLIERS, WITH CONSIDERATION GIVE IN ORDER TO BUSINESSES LOCATED IN HANCOCK COUNTY, COASTAL COUNTIES AND THE STATE OF MISSISSIPPI.

SECTION 00870

CERTIFICATION REGARDING DEBARMENT, SUSPENSION, NON-COLLUSION AND OTHER RESPONSIBILITY MATTERS

Under Executive Order 12549 individuals or organizations debarred from participation in Federal Assistance Programs may not receive an assistance award under a federal program or subagreement there under for $25,000 or more. Accordingly, each recipient of a Federally-Funded contract or subcontract exceeding $25,000 must complete the following certification (see 40 CFR 32.510). The prime bidder shall attach the copies of this certification to his bid.

The prospective participant certifies to the best of their knowledge and belief that it and its principals:

(a) Have not either directly or indirectly entered into any agreement, participated in any collusion; or otherwise taken any action in restraint of free competitive bidding in connection with this contract; nor have any of its officials, partners, employees or principal owners;

(b) Are not presently debarred, suspended, proposed for debarment, declared ineligible, or voluntarily excluded from covered transactions by any Federal department or agency;

(c) Have not within a three year period preceding this proposal been convicted of or had a civil judgment rendered against them for commission of fraud or a criminal offense in connection with obtaining, attempting to obtain, or performing a public (Federal, State or local) transaction or contract under a public transaction; violation of Federal or State antitrust statutes or commission of embezzlement, theft, forgery, bribery, falsification or destruction of records, making false statements, or receiving stolen property;

(d) Are not presently indicted for or otherwise criminally or civilly charged by a government entity (Federal, State or local) with commission of any of the offenses enumerated in paragraph (b) of this certification; and

(e) Have not within a three year period preceding this application/proposal had one or more public transactions (Federal, State or local) terminated for cause or default.

I understand that a false statement on this certification may be grounds for rejection of this proposal or termination of the award. In addition, under 18 U.S.C. Subsection 1001, a false statement may result in a fine of up to $10,000 or imprisonment for up to 5 years, or both.

Public Works Facility, Pole Barn Replacement(s) Re-Bid
Title of Project or Subcontract

COASTAL DEVELOPMENT & CONSTRUCTION
Prime or Subcontractor's Name

Signature/Date

( ) I am unable to certify to the above statements. Attached is my explanation.

SECTION 00880
CONTRACTOR CERTIFICATION STATEMENT,
STANDARD TERMS AND CONDITIONS AND FEDERAL ASSURANCES

Contractor Name: Coastal Development & Construction

Contract Number #:

The CONTRACTOR, by and through the undersigned authorized representative, further assures and certifies that: 1) it is familiar with, 2) it is complying with, and 3) it will continue to comply with all state and federal laws that apply to Contractor's activities or that impose restrictions on the Contractor's use of federal funding or grants, including, but not limited to, the following:

EQUAL EMPLOYMENT OPPORTUNITY If the contract is in excess of $10,000, contractor or subrecipient shall be prohibited from discrimination in all construction contracts and subcontracts. (Executive Order 11246, as amended by Executive Order 11375; 41 CFR, Part 60)

COPELAND "ANTI-KICKBACK" ACT: If the contract is in excess of $2,000, contractor or subrecipient shall be prohibited from inducing, by any means, any person employed in the construction, completion, or repair of public works, to give up any part of the compensation to which he/she is otherwise entitled. (18 U.S.C. § 874; 29 CFR, Part 3).

SECTION 102 AND 107 OF THE CONTRACT WORK HOURS AND SAFETY STANDARDS ACT: If the contract is a construction contract in excess of $2,000 or other contract which involves mechanics or laborers in excess of $2,500, contractor shall be required to compute the wages of every mechanic and laborer on the basis of a standard work week of 40 hours. Work in excess of the standard work week is permissible provided that the worker is compensated at a rate of not less than 1-1/2 times the basic rate of pay for all hours worked in excess of 40 hours in the work week. (40 U.S.C. § 327 - 330; 29 CFR, Part 5).

> Section 107 of the Contract Work Hours and Safety Standards Act is applicable to construction work and provides that no laborer or mechanic shall be required to work in surroundings or under working conditions, which are unsanitary, hazardous, or dangerous. These requirements do not apply to the purchases of supplies or materials or articles ordinarily available on the open market, or contracts for transportation or transmission of intelligence.

DAVIS-BACON ACT: If the contract is a construction or repair contract in excess of $2,000, contractors shall be required to pay wages to laborers and mechanics at a rate not less than the minimum wages specified in a wage determination made by the Secretary of Labor. In addition, contractors shall be required to pay wages not less often than once a week. The award of a contract shall be conditioned upon the acceptance of the wage determination. (40 U.S.C. § 276a through a-7; 29 CFR, Part 5).

AUTHORIZED ACCESS TO DOCUMENTS: The contractor agrees that the Recipient (Owner), EDA, the Office of Inspector General, the Comptroller General of the United States, or any of their duly authorized representatives, shall have access for the purpose of audit and examination to any books, documents, papers, and records of the contractor which are directly pertinent to that specific contract.

DOCUMENTS OF RECORD: The contractor agrees to maintain all required records for three (3) years after the Recipient (Owner) makes final payments and all other pending matters are closed.

FEDERAL CLEAN AIR ACT (42 U.S.C. § 7401 *et seq.*) and FEDERAL WATER POLLUTION CONTROL ACT (33 U.S.C. §1251 *et seq.*), If the contract in excess of $100,000, contractors shall be required to comply with all applicable standards, orders, or regulations issued pursuant to the aforementioned Acts. Violations shall be reported to EDA and the regional office of Environmental Protection Agency (EPA).

Certification of compliance with the above-identified provisions is a material representation of fact upon which the STATE relies in contracting with the CONTRACTOR. The failure to comply with any of said provisions is grounds for corrective action, suspension, and/or termination of this contract.

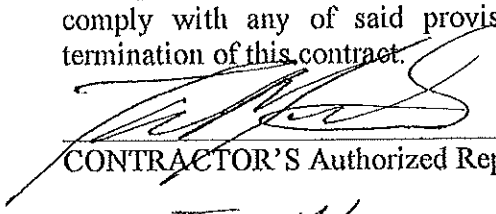

CONTRACTOR'S Authorized Representative (Signature)

10/5/22
Date

TIM MILES
CONTRACTOR'S Authorized Representative (Please Print)

V.P.
Title (Please Print)

SECTION 00885
FEDERALLY DECLARED DISASTER FUNDS

Miss. Code Ann. § 31-5-37

MISSISSIPPI CODE of 1972

*** Current through the 2012 Regular Session ***

TITLE 31. PUBLIC BUSINESS, BONDS AND OBLIGATIONS
CHAPTER 5. PUBLIC WORKS CONTRACTS
IN GENERAL

Miss. Code Ann. § 31-5-37 (2012)

§ 31-5-37. Contractors submitting bids for public works projects utilizing specified funding required to submit employment plan with bid; contents of plan; review of individuals for vacant positions

(1) All public works projects utilizing funds received by state or local governmental entities resulting from a federally declared disaster or a spill of national significance, including damages, penalties, fines or supplemental projects paid or financed by responsible parties pursuant to a court order, negotiated settlement, or other instrument, including under any law distributing such fines and penalties including the federal Resources and Ecosystems Sustainability, Tourist Opportunities and Revived Economy of the Gulf Coast Act of 2011 (R.E.S.T.O.R.E.), the Oil Pollution Act of 1990 or the Federal Water Pollution Control Act or similar legislation, shall be subject to the hiring policies established by this section.

(2) Contractors submitting bids for public works projects financed in whole or in part through the use of funds described in subsection (1) of this section shall submit with their bid an employment plan which shall include the following:

(a) The types of jobs involved in the public works project;

(b) The skill level of the jobs involved in the project;

(c) Wage information on the jobs involved in the project;

(d) The number of vacant positions that the contractor needs to fill;

(e) How the contractor will recruit, low wage and unemployed individuals for job vacancies;

(f) Such other information as may be required by the Mississippi Department of Employment Security; and

(g) Proof of registration with the Mississippi Department of Employment Security for taxation in accordance with the provisions of Title 71.

(3) When a contractor's bid is accepted, the contractor shall enter into an agreement with the entity that accepted the bid that requires the contractor not to hire any personnel to fill vacant positions necessary for the public works project for a period of ten (10) days after the date of the agreement. During the ten-day period the Mississippi Department of Employment Security shall submit qualified individuals to the contractor to consider for the vacant positions. The contractor shall review the individuals submitted by the department before hiring individuals who are not submitted by the department.

HISTORY: SOURCES: Laws, 2012, ch. 505, § 1, eff from and after passage (approved May 1, 2012.)

SECRETARY OF STATE

CHAPTER 800- EMPLOYMENT SERVICES

800.00 Mississippi First Initiative (Senate Bill 2662)

The Mississippi Jobs First Bill (SB NO. 2622 of the 2012 Legislative Session and any future corresponding citation in the Mississippi Code of 1972) requires contractors that are awarded bids for public works projects that utilize funds received by State or Local governmental entities resulting from a federally declared disaster or a spill of national significance to register and list job opportunities with the Mississippi Department of Employment Security (MDES). This initiative will ensure that Mississippians have an opportunity to apply for jobs created by a disaster.

NOTE: The following rules (800.01-800.04) concerning the Mississippi Jobs First Bill pertain only to contracts executed after the law went into effect on May 1, 2012. All contracts existing before the effective date are not subject to these provisions.

800.01 Responsibility of State and Local Government

(A) It is the responsibility of state and local government entities soliciting bids for public works projects that utilize funding resulting from a federally declared disaster or spill of national significance to ensure that all contractors submit, with their bid, a completed employment plan which shall include the following information: the type of jobs involved in the project; the skill level of the jobs involved in the project; wage information on the jobs involved in the project; the number of vacant positions that the contractor needs to fill; how the contractor will recruit low wage and unemployed individuals for job vacancies; other information that may be required by MDES; and proof of registration with MDES for taxation in accordance with provisions of Title 71.

(B) When a contractor's bid is accepted, the state or local government entity shall enter into an agreement with the contractor that requires the contractor to only hire personnel referred from MDES for a period of ten (10) days from when the contract is awarded.

800.02 Contractor Responsibilities

(A) Contractors that are awarded bids for public works projects that utilize funds received by State and Local Governmental entities resulting from a federally declared disaster or spill of national significance must submit an employment plan that includes the following information: the type of jobs involved in the project; the skill level of the jobs involved in the project; wage information on the jobs involved in the project; the number of vacant positions that the contractor needs to fill; how the contractor will recruit

low wage and unemployed individuals for job vacancies; other information that may be required by MDES; and proof of registration with MDES for taxation in accordance with provisions of Title 71 with their bid to the entity requesting the solicitation of services.

(B) When a contractors bid is accepted, the contractor shall enter into an agreement with the entity that accepted the bid that requires the contractor to only hire personnel referred from MDES for a period of ten (10) days from when the contract is awarded. Contractors must place a job order with MDES to receive a list of qualified individuals. The contractor is required to review the applicants submitted by MDES before hiring individuals who were not referred.

MDES shall define the ten (10) days as follows: The time period for the ten (10) days shall begin to run on the first day the job order is opened with MDES. The ten (10) days shall be considered working days and weekends and official state holidays shall not be counted. If the tenth (10th) day shall fall on a weekend or holiday, then the following Monday or the next day that MDES is open for business shall be deemed the tenth (10th) day.

The ten (10) day rule shall apply to any entity charged with hiring personnel under the awarded contract. For example, if the contractor enlists a temporary agency to hire employees for the project, the ten (10) day rule shall apply to the temporary agency, or any subcontractor the contractor may utilize for the project.

NOTE: The contractor is not prohibited from hiring MDES referrals during the ten (10) day time period and may hire employees referred by MDES immediately.

(C) The contractor is required to register his/her business online in the Workforce Investment Network Global System (WINGS) by visiting Wings.mdes.ms.gov. The following information is needed to register:

Register in the Workforce Investment Network Global Systems (WINGS) and create a username and password.
Employer Federal ID #
Company Name
Company (Corporate) Physical address if applicable
Company (Corporate) Mailing address for E-Verify notices (if applicable)
Company telephone number and fax number
Company contact name, title, phone number and email address

In order to create a job order the contractor must provide the WIN Job Center or Call Center Representative with the following information (Call Center information and a complete list of WIN Job Centers can be found on MDES's website: www.mdes.ms.gov):

Job title
Job physical location (Worksite)
Number of openings
Job description
Job qualifications (level of education, months of experience, driver's license if required)
Duration of the position (less than 3 days, 4 to 150 days, more than 150 days)
Temporary, permanent position or seasonal position
Full time or Part time
Number of hours to work per week
Days to work and shifts
Referral instructions (how the applicant will apply)
Job Order contact person if different from the Contractor registration contact.

800.03 Role of the MDES WIN Job Center

MDES will designate sites to assist contractors according to location of the federally declared disaster. After the job order(s) have been finalized and opened for recruitment, the MDES WIN Job Centers will begin the process of referring qualified applicants to the contractor to consider for the vacant positions.

800.04 Reporting Requirement

In accordance with the act, MDES will provide the Mississippi Legislature with an annual report ending June 30, 2013, and will follow each year thereafter. MDES will develop procedures to track and report relevant information received from contractors. The annual report will detail data received from contractors that were awarded contracts under this act throughout the year.

The following is a sample of the Certified Employment Plan Form for Certain Public Work Projects. An electronic fillable and printable PDF form can be found at http://www.dfa.state.ms.us/Offices/BOB/BOBforms.htm .

CERTIFIED EMPLOYMENT PLAN FORM FOR CERTAIN PUBLIC WORKS PROJECTS*

Project No. _____

Bid Date: _____

Project Title: _____

Institution/Agency: _____

Please provide the information requested below:

1. List the types of jobs that will be involved in this Project:

2. List the skill level of the jobs involved in the Project:

3. List the wages for jobs involved in the Project:

4. List the number of vacant positions that will need to be filled if awarded this Project:

5. Explain how low wage and unemployed individuals will be recruited for job vacancies:

6. Attach proof of registration with MDES for taxation purposes.

Sample

I certify that the information provided above is true and accurate to the best of my knowledge.

Contractor Name & Authorized Representative: _____

Signature: _____ Title: _____ Date: _____

**Note: This form should only be included in your bid if Miss. Code Ann. § 31-5-37 (Mississippi First Law) applies to the project. This law requires contractors submitting bids for public works projects utilizing specified funding to submit an employment plan with their bid.*

If your bid is accepted, please submit a copy of your employment plan to the Mississippi Department of Employment Security via fax at 601-407-1707, or via e-mail at disasterjobs@mdes.ms.gov.

SECTION 01000
GENERAL REQUIREMENTS

1.0 GENERAL

1.1 Summary

A. Scope of Specification

This specification prescribes the general requirements for all specifications that reference this section, are complementary to the General Conditions of the Contract contained in the Contract Documents and are not intended to duplicate or contradict the General Conditions. Contradictions shall be brought to the attention of the Engineer.

In resolving inconsistencies in the Contract Documents, the Contractor shall give precedence in the following order:

1. Contract
2. Supplementary Conditions
3. General Conditions
4. Specifications
5. Drawings
6. Geotechnical information

Figure dimensions on drawings shall take precedence over scale dimensions; detail drawings shall take precedence over general drawings. In case of a discrepancy between specifications and drawings or between various specification sections, the most expensive shall apply.

B. Terminology

Terminology is covered in the General Conditions; additions are as follows, and apply wherever such terms are used:

1. Architect/Engineer: Compton Engineering, Inc. (Also, may be referred to as "Company Engineer"; "Engineer", "E/A", or "A/E".

2. Owner: City of Waveland (may also be referred to as "Client" or "Recipient").

3. Contractor: Appropriate individual, partnership, company, or corporation as established by work assignments set forth by Owner.

4. Trade: Workmen or Mechanics with special skills, or firms that hire them, as applicable.

5. Any: The term "any" in the Contract Documents shall be interpreted as "any and all" whenever more than 1 item would be applicable for completion of the Work of the Project; for example, "any other general expenses."

6. Shop Drawings: Drawings, diagrams, schedules, and other data specifically prepared for the work by the Contractor to illustrate some portion of the work.

7. Product Data: Illustrations, standards, schedules, performance charts, instructions, brochures, diagrams, and other information furnished by the Contractor to illustrate a material, product, or system for some portion of the work.

8. Samples: Physical examples which illustrate materials, equipment, or workmanship, and establish standards by which the work will be judged.

1.2 References

The publications listed below form part of this specification. Each publication shall be the latest revision and addendum in effect on the date this specification is issued for construction unless noted otherwise. Except as modified by the requirements specified herein or the details of the drawings, Work included in this specification shall conform to the applicable provisions of these publications.

AA	Aluminum Association
AAMA	Architectural Aluminum Manufacturer's Association
AASHTO	American Association of State Highway and Transportation Officials
ABPA	Acoustical and Board Products Association
ACI	American Concrete Institute
AGA	American Gas Association
AGMA	American Gear Manufacturers Association
AIEE	American Institute of Electrical Engineers
AISC	American Institute of Steel Construction
AISI	American Iron and Steel Institute
AITC	American Institute of Timber Construction
ANSI	American National Standards Institute
APA	American Plywood Association
API	American Petroleum Institute
ASCE	American Society of Civil Engineers
ASHRAE	American Society of Heating, Refrigeration and Air Conditioning Engineers, Inc.
ASME	American Society of Mechanical Engineers
ASSCBC	American Standard Safety Code for Building Construction
ASTM	American Society for Testing and Materials
AWI	Architectural Woodwork Institute
AWPA	American Wood Preservers Association
AWPB	American Wood Preservers Bureau
AWS	American Welding Society
AWWA	American Water Works Association
BHMA	Builders Hardware Manufacturers Association
CRSI	Concrete Reinforcing Steel Institute
CS	Commercial Standard
EPA	United States Environmental Protection Agency
Fed. Spec. (FS)	Federal Specifications
HI	Hydraulic Institute
HMI	Hoist Manufacturers Institute
IBC	International Building Code
ICBO	International Conference of Building Officials
IEEE	Institute of Electrical and Electronics Engineers, Inc.
ICEA	Insulated Cable Engineers Association
NBHA	National Builders Hardware Association
NBS	National Bureau of Standards
NEC	National Electrical Code
NEMA	National Electrical Manufacturers Association
NESC	National Electric Safety Code
NFPA	National Fire Protection Association
NLMA	National Lumber Manufacturers Association
NSF	National Science Foundation
NWMA	National Woodwork Manufacturers Association
OSHA	Occupational Safety and Health Act (both Federal and State)
PCA	Portland Cement Association
PCI	Prestressed Concrete Institute
PS	Product Standards Section - U.S. Department of Commerce
RMA	Rubber Manufacturers Association
SAE	Society of Automotive Engineers
SDI	Steel Door Institute
SJI	Steel Joists Institute

SSPC	Steel Structures Painting Council
STD SPEC	Mississippi Standard Specifications for Road and Bridge Construction
TCA	Tile Council of America
UL	Underwriters Laboratories, Inc.
WWPA	Western Wood Products Association

II. U.S. Department of Commerce, Bureau of Standards for Lumber

1.3 System Description

The intent of the contract documents is to include the items necessary for the proper execution and completion of the work.

A. The contract documents are complementary, and what is required by any one shall be as binding as if required by all.

B. Work not covered in the specifications and drawings will not be required, unless it is consistent therewith and is reasonably inferable therefrom as being necessary to produce intended results.

C. Written interpretations of specifications and drawings are valid only when issued by the Engineer.

D. Words and abbreviations which have well-known technical or trade meanings are used in the specifications and drawings in accordance with such recognized meanings.

E. Where custom built equipment is specified, and an independent testing laboratory label or listing is not applicable to the completed product, components used in the construction and assembly of such equipment must be labeled or listed by an independent testing laboratory acceptable to the local governing authorities, where such label or listing is applicable to the components. These labels shall be securely affixed to the components in a conspicuous location.

F. The Mechanical and Electrical Drawings are diagrammatic, intending to show general locations and arrangements of piping, wiring, equipment, and specialties and not necessarily showing the required offsets, connections, or appurtenances. Accurately lay out work in cooperation with other trades to avoid conflicts and to obtain a neat and workmanlike installation which will afford maximum practical accessibility for operation, maintenance, and headroom.

G. The Civil Drawings are diagrammatic, intending to show general locations and arrangements and piping, equipment and structures and are not necessarily showing the required offsets, connects, fittings, or appurtenances. Contractor's shall not use electronic files to locate civil equipment, including, but not limited to, hydrants, valves, cleanouts, backflows, meters, etc. All such equipment shall be located per the Contract Documents (plans and details) and industry standards.

H. Layout in field from electronic drawings shall be at the risk of the Contractor. The Contractor is responsible for placement/location of objects as detailed or noted in the drawings. If the Contractor does not have sufficient information to place/locate objects, then they should immediately bring their concerns to the attention of the Engineer prior to construction.

I. Drawing scale is selected for convenience in presentation and not for establishment of dimensions.

1. Use drawing dimensions for performance of work.

2. Verify actual dimensions at the site to determine that sufficient space exists and that no interference will be caused.

1.4 Submittals

A. Filing of Drawings

The Contractor shall file necessary drawings with the Insurance Authority and Local Authorities, if their approval is required. Copies of these drawings bearing the stamp of approval of the authorities having jurisdiction shall be submitted to the Engineer prior to starting the Work.

B. Record Documents and Samples

The Contractor shall maintain at the site one record copy of all drawings, specifications, addenda, change orders, and other modifications, in good order and marked currently to record all changes made during construction; and shall maintain at the site reviewed shop drawings, product data, and samples. These shall be available to the Engineer and shall be delivered for the Owner upon completion of the work and during construction at time of submission of payment application, upon A/E requests. Failure to maintain and submit record drawings may be subject to withholding payment due to the Contractor until document markings are current with status of project.

C. Documents

Drawings shall be submitted as hard copies as well as in electronic form. The electronic format acceptable is Autocad *.dwg or *.dxf.

Shop drawings, product data, and samples shall comply with individual specification section requirements and as follows:

1. Shop drawings shall be on reproducible translucent vellum for return with remarks noted if larger than 11" x 17".

2. Product data shall be submitted in a quantity of 6 copies, unless otherwise approved in the pre-construction conference.

3. Submit samples in a quantity of 3; one to be retained by the Engineer, one to be retained at the construction site, and one to be returned by the Engineer to the originator after approval.

4. Approval indicates conformance to contact documents (not performance, code compliance, dimensions, or quantities) and does not constitute approval to vary from contract documents.

5. Resubmit disapproved shop drawings, product data, and samples for approval in same manner as for first submittal.

6. No portion of the work requiring shop drawings, product data or sample approval shall be started until Engineer approval is obtained in writing.

2.0 PRODUCTS

2.1 General

A. Substitution for items described in the contract documents will be specified in the General Conditions.

3.0 EXECUTION

3.1 Job Site Safety

A. The Contractor shall be required to abide by all requirements in the General Conditions. The Contractor must assign an individual to be responsible for site safety.

3.2 Temporary Service

A. The Contractor shall be responsible for providing water to the site if required. The Contractor shall also be responsible for providing sewer facilities (chemical toilets).

B. The Contractor will provide for temporary power at the site.

3.3 Field Quality Control

A. Workmanship contemplated under this work shall be first class in every respect. Surfaces, members, frames, and units shall be true, even, and in alignment. No warped, bent, dented, or otherwise damaged members of units shall be built into the work. Connections shall be true, tight, and neat. Arises, soffits, and intersections shall be straight and true. Finishes shall be free from chips, dents, or other imperfections not in conformity with first-class work.

B. Factory assemblies shall conform to the first-class standards of the trades concerned.

C. Defective materials shall not be built in and, if built in, shall be removed at the Contractor's expense. Where, in the opinion of the Engineer or Owner, doubt exists as to the quality or effectiveness of the work, the work shall be reinstalled as directed.

3.4 Bid Breakdown

The Contractor shall prepare a detailed bid breakdown to be used for estimating progress of the work. Breakdowns used shall address the individual sections of the specifications. Some sections may be combined if they do not contribute substantially to the cost of the project. The Engineer and Owner reserves the right to request modifications to the breakdown to address individual items if required.

3.5 Cleanup

A. Daily Cleanup

1. Maintain the premises and Project site in a reasonable neat and orderly condition, free from accumulations of waste materials and rubbish during the entire construction period.

2. Remove crates, cartons, trash and flammable waste materials from the work areas by the end of each working day.

3. Do not dispose of trash or debris by burning on Project site.

4. Clean and leave free from rubbish, construction debris, and dirt; dust electrical closets, pipe and duct shafts, chases, furred spaces and similar spaces which are generally unfinished, roof drains and roof areas.

5. Clean and restore any finished surface which is defaced in any way.

6. Provide and maintain runner strips of nonstaining kraft building paper on finished floors.

B. Final Cleanup

Immediately prior to final site inspection by the Engineer, clean site of all trash and debris, clean drainage structures, and verify erosion control is in-place and structurally sound.

4.0 PAYMENTS

4.1 Payment for work in this section shall be included in the unit price / lump sum price as outlined in the Bid. Bid price shall include all cost of labor, materials and incidentals complete.

SECTION 01001
ABBREVIATIONS

Whenever in these Contract Documents the following abbreviations are used, the intent and meaning shall be interpreted as follows:

AA	Aluminum Association
AAMA	Architectural Aluminum Manufacturer's Association
AASHTO	American Association of State Highway and Transportation Officials
ABPA	Acoustical and Board Products Association
ACI	American Concrete Institute
AGA	American Gas Association
AGMA	American Gear Manufacturers Association
AIEE	American Institute of Electrical Engineers
AISC	American Institute of Steel Construction
AISI	American Iron and Steel Institute
AITC	American Institute of Timber Construction
ANSI	American National Standards Institute
APA	American Plywood Association
API	American Petroleum Institute
ASCE	American Society of Civil Engineers
ASHRAE	American Society of Heating, Refrigeration and Air Conditioning Engineers, Inc.
ASME	American Society of Mechanical Engineers
ASSCBC	American Standard Safety Code for Building Construction
ASTM	American Society for Testing and Materials
AWI	Architectural Woodwork Institute
AWPA	American Wood Preservers Association
AWPB	American Wood Preservers Bureau
AWS	American Welding Society
AWWA	American Water Works Association
BHMA	Builders Hardware Manufacturers Association
CRSI	Concrete Reinforcing Steel Institute
CS	Commercial Standard
EPA	United States Environmental Protection Agency
Fed. Spec.	Federal Specifications
HI	Hydraulic Institute
HMI	Hoist Manufacturers Institute
IBC	International Building Code
ICBO	International Conference of Building Officials
ICC	International Code Council
ICEA	Insulated Cable Engineers Association
IEEE	Institute of Electrical and Electronics Engineers, Inc.
NBHA	National Builders Hardware Association
NBS	National Bureau of Standards
NEC	National Electrical Code
NEMA	National Electrical Manufacturers Association
NESC	National Electric Safety Code
NFPA	National Fire Protection Association
NLMA	National Lumber Manufacturers Association

NSF	National Science Foundation
NWMA	National Woodwork Manufacturers Association
OSHA	Occupational Safety and Health Act (both Federal and State)
PCA	Portland Cement Association
PCI	Prestressed Concrete Institute
PS	Product Standards Section - U.S. Department of Commerce
RMA	Rubber Manufacturers Association
SAE	Society of Automotive Engineers
SDI	Steel Door Institute
SJI	Steel Joists Institute
SSBC	Southern Standard Building Code; Coastal Regions
SSPC	Steel Structures Painting Council
STD SPEC	Mississippi Standard Specifications for Road and Bridge Construction
TCA	Tile Council of America
UBC	Uniform Building Code
UL	Underwriters Laboratories, Inc.
WWPA	Western Wood Products Association

Unless a particular issue is designated, all references to the above specifications, standards, or methods shall, in each instance, be understood to refer to the issue in effect (including all amendments) on the first published date of the Invitation to Bid.

SECTION 01010
SUMMARY OF WORK

1. GENERAL

1.1 This section describes the project in general and provides an overview of the extent of the work to be performed. Detailed requirements and extent of work is stated in the applicable specification sections and shown on the drawings. The Contractor shall provide and pay for all labor, materials, equipment, tools, construction equipment, and other facilities and services necessary for proper execution, testing and completion of the work.

2. REASONABLY IMPLIED PARTS OF THE WORK SHALL BE DONE THOUGH ABSENT FROM SPECIFICATIONS

2.1 Any part or item of the work which is reasonably implied or normally required to make each installation satisfactorily operable shall be performed by the Contractor and the expense thereof shall be included in the applicable unit prices or lump sum prices bid for the work. It is the intent of these specifications to provide the Owner with complete operable systems, subsystems, and other items of work. All miscellaneous appurtenances and other items of work that are incidental to meeting the intent of these specifications shall be considered as having been included in the applicable unit prices or lump sum prices bid for the work even though these appurtenances and items may not be specifically called for in the specifications.

3. DESCRIPTION OF THE PROJECT

3.1 The following is a general description of the work contained in this Contract. The drawings for the construction of the Public Works Facility Pole Barn Replacement Project consists of five (5) sheets, dated February 9, 2022.

3.2 The project scope consists of demolition and reconstruction of the Public Works Facility Pole Barn. The work is separated into two bid schedules: Bid Schedule No. 1 involves selective demolition and disposal of the existing facility measuring 30' x 80'L and constructing a new pole barn of the same size in the same footprint (FEMA Funded); Bid Schedule No. 2 involves constructing a new pole barn measuring 30'Wx 140'L at a location north of the existing pole barn at the Public Works Facility. This bid schedule is funded by the City of Waveland and will involve excavation and grading of the existing ground and construction of the new structure. Utilities (i.e., water, sewer and electrical) are not included in this contract.

4. SEQUENCE OF OPERATIONS

4.1 The Contractor is required to determine his own method of construction and detailed work sequence, within the terms of the Contract.

4.2 The Contractor shall cooperate in the coordination of his activities in a manner that will provide the least interference with other contracts, other contractors, and/or utility companies working in the area.

4.3 If any difficulty or dispute should arise in the accomplishment of the above, the problem shall be brought immediately to the attention of the Engineer.

5. WORK COVERED BY CONTRACT DOCUMENTS

5.1 Contractor's Duties:

5.1.1 Except as specifically noted, provide and pay for:

a. Labor, materials and equipment.

b. Tools, construction equipment and machinery.
c. Water, heat and utilities required for construction.
d. Other facilities and services necessary for proper execution and completion of the Work.

5.1.2 Pay legally required sales, consumer, use, payroll, privilege and other taxes.

5.1.3 Secure and pay for, as necessary, for proper execution and completion of work, and as applicable at the time of the receipt of the bids:

a. Permits.
b. Government fees.
c. Licenses.

5.1.4 Give required notices.

5.1.5 Comply with codes, ordinances, rules, regulations, orders and other legal requirements of public authorities which bear on performance of work.

5.1.6 Promptly submit written notice to Professional of observed variance of Contract Documents from legal requirements. It is not the contractor's responsibility to make certain that drawings and specifications comply with codes and regulations. Appropriate modifications to Contract Documents will adjust necessary changes. Assume responsibility for work known to be contrary to such requirements, without notice.

5.1.7 Enforce strict discipline and good order among employees. Do not employ or work unfit persons, or persons not skilled in assigned task.

5.1.8 Provide a written safety plan.

5.2 Hazardous Materials: The Prime General Contractor is responsible for the removal and disposal of any hazardous materials encountered in the performance of the Contract requirements. Hazardous Containing Materials (HCM) include, but are not limited to, Asbestos and Lead Paint and should be identified and removed as a part of the Contract. The absence of details does not relieve the Prime General Contractor from the responsibility of removal and disposal; but a Change Order could be executed in the absence of identified HCM in the documents.

5.3 Subcontractor's List: The Prime General Contractor will submit to the Owner a list of all Subcontractors to be used on the Project within seven (7) days after written notice of contract award by the Owner. Any Subcontractor listed must be acceptable to the Owner.

5.4 Coordination: The General Contractor is responsible for the coordination of the total project. All other Contractor and all Subcontractors will cooperate with the General Contractor so as to facilitate the general progress of the Work. Each trade shall afford all other trades every reasonable opportunity for the installation of their work.

6. WORK BY OTHERS

6.1 Testing will be paid for by the Owner.

6.2 All other Work by Others shall be described in each appropriate Project Manual section and noted on the Drawings.

7. CONTRACTOR'S USE OF PREMISES

7.1 Confine operations at site to areas permitted by:

a. Law.

b. Ordinances.
c. Permits.
d. Contract Documents
e. Owner.

7.2 Do not unreasonably encumber site with materials or equipment.

7.3 Do not load structure with weight that will endanger structure.

7.4 Assume full responsibility for protection and safekeeping of products stored on premises.

7.5 Move any stored products which interfere with operations of Owner or other Contractors.

7.6 Obtain and pay for use of additional storage or work areas needed for operations.

7.7 Limit use of site for work and storage to the area indicated in the drawings.

8.0 PAYMENT

8.1 The work specified in this section shall be considered incidental and the cost shall be included as part of the appropriate lump sum or unit prices stated in the Bid.

SECTION 01011
SITE CONDITIONS

1.0 SUBSURFACE INFORMATION

1.1 Subsurface investigations have not been made. The Contractor shall provide his own investigation as required to properly accomplish the work.

2.0 DIFFERING SUBSURFACE CONDITIONS

2.1 In the event latent physical conditions are found materially different from those ordinarily encountered and generally recognized as inherent in the character of work covered in these Contract Documents, the Contractor shall promptly, and before such conditions are disturbed, notify the Engineer in writing of such changed conditions.

2.2 The Engineer will investigate such conditions promptly and following this investigation, the Contractor shall proceed with the work, unless otherwise instructed by the Engineer. If the Engineer finds that such conditions do so materially differ and cause an increase or decrease in the cost of, or in the time required for performing the work, the Engineer will recommend to the Owner the amount of adjustment in cost and time he considers reasonable. The Owner will make the final decisions on all Change Orders to the Contract regarding any adjustment in cost or time for completions.

3.0 SITE INVESTIGATION AND REPRESENTATION

3.1 The Contractor acknowledges that he has satisfied himself as to the nature and location of the work; the general and local conditions, particularly those bearing upon availability of transportation, disposal, handling and storage of materials; availability of labor, water, electric power, and roads; uncertainties of weather, river stages, or similar physical conditions at the site; the conformation and conditions of the ground; the character of equipment and facilities needed preliminary to and during the prosecution of the work; and all other matters which can in any affect the work or the cost thereof under this Contract.

3.2 The Contractor further acknowledges that he has satisfied himself as to the character, quality, and quantity of surface and subsurface materials and groundwater to be encountered from inspecting the site. Any failure by the Contractor to acquaint himself with all the available information will not relieve him from responsibility for properly estimating the difficulty or cost of successfully performing the work. Neither the Owner, nor the Engineer assume responsibility for any conclusion or interpretation made by the Contractor on the basis of the information made available by the Owner, or the Engineer.

4.0 VERTICAL AND HORIZONTAL CONTROL

4.1 The Contractor shall provide any additional vertical and horizontal control points if necessary, for construction. It will be the Contractor's sole responsibility to lay out the work. When new construction connects to existing facilities, the Contractor shall check and establish the exact location of the point of connection prior to construction. The Engineer will not be responsible for any elevations given other than those provided as indicated herein.

4.2 All control points, marks, and other information shall be carefully preserved by the Contractor, and in the event of their careless of unnecessary destruction or removal by him or any of his subcontractors, such stakes, marks, and other information will be replaced at the Contractor's expense by means of a deduction from the Contract monies due the Contractor.

4.3 The Contractor shall recheck all top and invert elevations of the storm sewer lines prior to construction. Copies of the field notes shall be turned over to the Engineer for review. The field information should be obtained utilizing elevations from the drawings. Rod readings for determination of grade are not acceptable.

4.4 Failure to perform this work will not relieve the Contractor from responsibility for checking and adjusting pipeline grades.

5.0 PROFILE ELEVATIONS

5.1 Existing ground profiles shown on the drawings were plotted from approved field surveys.

6.0 LAND MONUMENTS

6.1 The Contractor shall preserve all existing land monuments encountered. If monuments interfering with the proposed construction are encountered during the work, notify the Engineer immediately and allow 2 working days for arrangements to be made to reference them for later replacement. All monument replacement shall be at the expense of the Contractor and performed by a land surveyor licensed in the State of Mississippi.

7.0 EXISTING UTILITIES

7.1 Known utilities and structures adjacent to or encountered in the work are shown on the drawings. The locations shown are taken from existing records and it is expected that there may be some discrepancies and omissions in the locations and quantities of utilities and structures shown. Those shown are for the convenience of the Contractor only, and no responsibility is assumed by either the Owner, or the Engineer for their accuracy or completeness.

7.2 Prior to move-in and in conjunction with the work under Item 4 above, the Contractor shall verify the location of utilities, including depth and report this information to the Engineer. Conflicts, if any, will be resolved prior to move-in.

7.3 No attempt has been made to locate services whether water, sewer, or gas. Location and repairs to services damaged by the Contractor are considered incidental to construction and the cost should be included in the applicable unit price or lump sum bid items.

7.4 In the event utilities and/or structures are encountered that are not shown on the drawings, adjustments to the Contract shall be provided for in accordance with the GENERAL CONDITIONS, ALTERATIONS. The Contractor shall excavate areas where latent components may materialize some time ahead of construction in order to allow the Owner to institute appropriate changes and to mitigate any delays.

8.0 RESPONSIBILITY FOR UTILITY PROPERTIES AND SERVICE

8.1 Neither the Owner nor his officers or agents shall be responsible for the Contractor for damages as a result of the Contractor's failure to protect utilities encountered in the work.

8.2 The Contractor shall at all times provide unobstructed access to fire hydrants, underground conduit, manholes and water or gas valve boxes.

8.3 Where the Contractor's operations could cause damage or inconvenience to railway, telephone, television, power, oil, gas, water, sewer, irrigation, or other systems adjacent or near the work, operations shall be suspended until the Contractor has made all arrangements necessary for the protection of these utilities and services and the Engineer has been notified of these arrangements.

8.4 Notify the Engineer and all utility offices that are affected by the construction operation at least 7 days in advance of commencing construction operations. The Contractor shall not expose any utility without first obtaining permission from the appropriate agency and notifying the Engineer of this permission. Once permission has been granted, locate and, if necessary, expose and provide temporary support and/or relocation in advance of operations.

8.5 Protect all utility poles from damage. If interfering utility poles, guy wires or anchors are encountered, the Contractor shall notify the Engineer and the appropriate utility company as soon as possible and at least 48

hours in advance of construction operations to permit the necessary arrangements for protection or relocation of the interfering poles.

8.6 The Contractor shall be solely and directly responsible to the Owner and operators of such utility properties for any damage, injury, expense, loss, inconvenience, delay, suits, actions, or claims of any character brought because of any injuries or damage that may result from the construction operations under his Contract.

8.7 In the event of interruption to domestic water, sewer, storm drain, or other utility services as a result of accidental breakage due to construction operations, promptly notify the proper authority. Cooperate with said authority in restoration of service as promptly possible and bear all costs of repair. In no event shall interruption of any water or utility service be allowed unless prior approval is granted by the Owner of the utility.

8.8 The Contractor shall replace, at his own expense, any and all other existing utilities or structures removed or damaged during construction, unless otherwise provided for in these Contract Documents or ordered by the Engineer.

9.0 RELOCATIONS REQUIRED BY CONSTRUCTION

9.1 Where existing utilities, structures, or other physical obstructions block or impede construction under this Contract, they shall be permanently relocated. Such relocations shall be considered as required by construction. All other relocations shall be treated in accordance with UTILITY INTERFERENCES INCIDENTAL TO CONSTRUCTION below.

9.2 The Contractor shall give immediate notice to the Engineer and the Owner of the utility when a physical conflict is determined to exist. The actual relocation will be accomplished by the Owner of the utility, structure or other physical obstruction unless otherwise specified in these Contract Documents. Any delays resulting from the required relocations of the utilities are the responsibility of the Contractor.

10.0 UTILITY INTERFERENCES INCIDENTAL TO CONSTRUCTION

10.1 Where existing utility lines or structures are so located as to interfere with the Contractor's method of performing the work, but do not reasonably block or impede construction, under the Contract, any modification, alteration, or relocation of interfering utility, either permanent or temporary, shall be accomplished at the expense of the Contractor.

10.2 The Contractor shall give immediate notice to the Engineer and the Owner of the utility when an interference is determined to exist and shall obtain approval to relocate such utility or to discontinue service from the Engineer and the Owner of the utility. The Owner of the utility shall have the right to do all work required to discontinue, relocate, and replace interfering utilities and charge the Contractor for all costs thereof. When approved by the Engineer and the Owner of the utility, all work required to discontinue, relocate and replace interfering utilities may be done by, or arranged for, by the Contractor. All such discontinuance, relocation, and replacement shall be accomplished in accordance with all requirements of the Owner of the utility.

10.3 When notified by the Contractor that an interference or conflict has been determined to exist, the Engineer will determine whether such interference shall be considered as required by construction or as incidental to construction.

11.0 INTERFERING STRUCTURES

11.1 Take necessary precautions to prevent damage to existing structures where on the surface, aboveground, or underground. An attempt has been made to show major structures on the drawings. While the information has been compiled from the best available sources, its completeness and accuracy cannot be guaranteed, and it is presented as a guide to avoid known possible difficulties.

11.2 Protect existing structures from damage, whether or not they lie within the right-of-way or the limits of the easements obtained by the Owner. Where existing structures are damaged during the work, they shall be

restored at the Contractor's expense to at least their original condition and to the satisfaction of the Engineer.

11.3 The Contractor may, with the approval of the Engineer and without additional compensation, remove and replace in a condition as good as or better than original, any small interfering structures such as fences, mail boxes and signposts that interfere with the Contractor's operations.

12.0 FIELD RELOCATION

12.1 During the progress of the work, minor relocations of the work may be necessary. Such relocations shall be made only with the agreement of the Engineer. If existing structures are encountered that will prevent construction as shown, notify the Engineer before continuing with the work in order that the Engineer may make such field revisions as necessary to avoid conflict with the existing structures. If the Contractor proceeds with the work despite this interference, he shall be responsible for any damage that may occur.

13.0 EASEMENTS

13.1 Where part of the work is located on private property, easements are shown. The Contractor shall determine the adequacy of easements and shall obtain additional easements, if required.

13.2 Upon completion of work in any Owner provided easement area, the surface shall be restored as required and to the satisfaction of the Engineer. Restoration shall begin within 14 days following completion of construction in the easements. The restoration shall include, at minimum: final grading and grassing; limbing; fence repairs and replacement; sidewalk; curb; and drive repairs; etc. Failure to comply with this provision shall be considered reason to withhold a portion or all monies due the Contractor on Request for Payment.

13.3 The Contractor shall confine construction operations to within the easement limits or make his own special agreement with the property owners for any additional area required and provide two copies of written verification to the Engineer.

13.4 Before final payment will be authorized, the Contractor shall furnish the Owner with written releases from property owners where special agreements have been made by the Contractor, or when his operations, for any reason, have not been kept within the limits of easements obtained by the Owner.

13.5 In the event the Contractor is unable to secure the written releases required in the above paragraph, he shall inform the Engineer of the reasons for his failure to do so. The Engineer will examine the site and will direct the Contractor to complete any work that may be necessary to satisfy the terms of the easement or special agreement. Should the Contractor refuse to do the work, the Owner reserves the right to have it done by separate contract and deduct the cost of same from monies due the Contractor, or the Owner may require the Contractor to furnish a bond in a sum satisfactory to the Owner to cover any legal claims for damages. When the Owner is satisfied that the work has been completed in accordance with the terms of the easement or special agreement, he may waive the requirement of obtaining the statement if the Contractor's failure to obtain such statement is due to the grantor's refusal to sign and this refusal is not based upon any legitimate claims that the Contractor has failed to fulfill the terms of the easement or special agreement, or if the Contractor has overdue hardship in contacting the grantor.

14.0 PAYMENT

14.1 The work specified in this section shall be considered incidental and the cost shall be included as part of the appropriate lump sum or unit prices stated in the Bid.

SECTION 01014
PROTECTION OF THE ENVIRONMENT

1.0 GENERAL

The Contractor, in executing the work, shall maintain all work areas on and off the site free from environmental pollution that would be in violation of any federal, state, or local regulations.

2.0 PROTECTION OF SEWERS

Take adequate measures to prevent the impairment of the operation of the existing sewer system. Prevent construction material, pavement, concrete, earth, or other debris from entering a sewer or sewer structure.

All sewage flow interfering with construction and requiring diversion shall be diverted to sewers leading to a wastewater treatment plant. Prior to commencing excavation and construction, the Contractor shall submit for the Owner's review detailed plans (including routing and connections) showing how he intends to handle and dispose of sanitary sewer wastes. By reviewing the plan, the Owner neither accepts any responsibility for the adequacy thereof nor for any damages to public or private property resulting therefrom. Such responsibilities remain with the Contractor.

3.0 PROTECTION OF WATERWAYS

The Contractor shall comply with all laws prohibiting the pollution of any lake, stream, river, or wetland by the dumping of, or the delivery of any runoff water containing any refuse, rubbish, dredge material, or debris therein.

The Contractor shall comply with the procedures outlined in the U.S. Environment Protection Agency manuals entitled, "Guidelines for Erosion and Sedimentation Control Planning and Implementation", and "Processes, Procedures and Methods to Control Pollution Resulting from All Construction Activity" and shall incorporate adequate measures to minimize delivery of sediment from the construction site to adjacent or downstream trees, lands, or water bodies.

4.0 CLEANING DURING CONSTRUCTION

At all times, maintain areas covered by the Contract and public properties free from accumulations of waste, debris, and rubbish caused by construction operations.

Excavated materials shall be removed from the site in a manner that will cause the least damage to adjacent lawns, grassed areas, trees, gardens, shrubbery, or fences regardless of whether these are on private property or on public rights-of-way.

Cleaning and disposal operations shall comply with local ordinances and anti-pollution laws. Do not burn or bury rubbish, debris, or waste materials on the project site or dispose of volatile wastes such as mineral spirits, oil, chemicals, or paint thinner in storm or sanitary drains. Disposal of waste, debris, and rubbish into streams or waterways is prohibited.

Appropriate containers for collection and disposal of waste materials, debris, and rubbish shall be provided by the Contractor.

5.0 NOISE AND DUST CONTROL

The Contractor shall so conduct all his operations that they will cause the least annoyance to the residents in the vicinity of the work and shall comply with all applicable laws. Vehicles carrying rock, concrete, or other material shall be routed over such streets as will cause the least annoyance to the public and shall not be

operated on public streets between the hours of 8 p.m. and 7 a.m. or on Sundays or legal holidays unless the Contractor obtains written permission from appropriate agencies within the municipality(ies) in which the work is to be conducted.

All unpaved streets, roads, detours, haul roads, or roads used in the construction area shall be given a dust preventive treatment or periodically watered to prevent dust. Applicable environmental regulations for dust preventions shall be strictly enforced.

6.0 PAYMENT

The work specified in this Section shall be considered incidental and the cost shall be included as part of the appropriate lump sum or unit prices stated in the Bid.

SECTION 01016
PROTECTION OF PROPERTY

1.0 ACCIDENT REPORTS

If serious injury or damage occurs, the accident shall be reported immediately by telephone or messenger to the Engineer and to appropriate local authorities. In addition, the Contractor must promptly report in writing to the Engineer all accidents in connection with the work, giving full details, names and statements of witnesses.

If a claim is made by anyone against the Contractor or any subcontractor resulting from an accident, the Contractor shall promptly report the facts in writing to the Engineer, giving full details of the claim, including investigating and restitution.

2.0 COMPLAINTS

All complaints received by the Contractor shall be reported to the Engineer no later than the working day following receipt thereof. Such reports shall include the name, address, date, time received, date and type of action complained above, and a brief description of the alleged damages or other circumstances upon which the complaint is predicated. Each complaint shall be assigned a separate number, and all complaints shall be numbered consecutively in order of receipt. In the event more than one complaint is received from the same complainant, each later complaint shall show all previous complaint numbers registered by the same complainant. In addition, a summary report shall be made to the Engineer each month which shall indicate the date, time, and name of the person investigating the complaint and the amount of damages claimed (or estimated thereof), including the amount of settlement, if any. When settlement of a claim is made, the Engineer shall be furnished with a copy of the release of claim by the claimant. The Owner shall be notified immediately, throughout the statutory period of liability, of any formal claims or demands made by attorneys on behalf of claimants; of the serving of any notice, summons, subpoena, or other legal documents incidental to litigation; and for any out-of-court settlement or court verdicts resulting from litigation.

3.0 NOTICE OF WORK

At least 7 days prior to move in, the Contractor shall notify all public and private entities of his mobilization efforts in the following manner:

1. City of Waveland: a letter directed to the City Clerk.

2. Written notice provided to the local Sheriff Office, Fire Department, Postal Services, and Utilities serving the area.

3. General public: Notice published in the Sea Coast Echo and Sun Herald.

4. Local Municipalities (If affected)

The notifications shall include the commencement dates, a general description of the work required, and a person to contact with questions concerning the project. Copies of the notifications will be sent to the Engineer for review prior to publication.

4.0 ACCESS FOR EMERGENCY, PUBLIC TRANSPORTATION, AND POSTAL VEHICLES

Notify the fire department, police department, and applicable public and school transportation companies at least 14 days before closing any street or portion thereof. No closing shall be made without appropriate

concurrence of aforementioned departments. Notify said departments when the streets are again passable for emergency vehicles. Maintain vehicle access to consecutive arterial crossings or dead-end streets, in excess of 300 linear feet, unless special written permission has been obtained from the fire and police departments.

The Contractor shall leave his night emergency telephone number or numbers with the fire and police departments, so that contact may be made easily at all times in case of barricade or flare trouble or other emergencies.

Maintain postal service facilities in accordance with the requirements of the U.S. Postal Service. Move mailboxes to temporary locations designated by the Postal Service and, at the completion of the work in each area, replace them in their original location and in a condition satisfactory to the U.S. Postal Service.

5.0 PROTECTION OF PROPERTY

The Contractor shall employ such means and methods as necessary of adequately protect all property against damage. In the event of damage to property, the Contractor shall, at his own expense, immediately restore the property to a condition at least equal to its original condition and to the satisfaction of the Engineer.

6.0 PRESERVATION AND RESTORATION

SITE RESTORATION AND CLEANUP

At all times during the work, keep the premises clean and orderly, and upon completion of the work, repair all damage caused by equipment and leave the project free of rubbish or excess materials of any kind.

Stockpile excavated materials in a manner that will cause the least damage to adjacent lawns, grassed areas, gardens, shrubbery, or fences, regardless of whether there are on private property, or on state, county, or city rights-of-way. Remove all excavated materials from grassed and planted areas and leave these surfaces in a condition equivalent to their original condition. Replace topsoiled areas where pipeline installations are outside of roadways. The Contractor shall rake and grade these areas to conform to their original contour and seed flat areas and sod areas with a slope greater than 2 to 1.

All existing drainage ditches and culverts shall be reopened and graded, and natural drainage restored. Restore culverts broken or damaged to their original condition and location.

Upon completion of pipe laying backfilling operation, hand-rake and drag all former grassed and planted areas, leaving all disturbed areas free from rocks, gravel, clay, or any other foreign material and ready, in all respects, for seeding. The finished surface shall conform to the original surface, and shall be free draining and free from holes, ruts, rough spots, or other surface features detrimental to a seeded area.

The Contractor shall be responsible for erosion control for the entire project site throughout the construction term and shall take preventive measures for keeping erosion from occurring.

RESEEDING AND FERTILIZING

Originally seeded areas shall be fertilized and reseeded with first quality seed or planted with new sod as approved by the Owner. All ground preparation, reseeding, and sodding shall be done in accordance with the best accepted practices for lawn planting. The Contractor shall be responsible for obtaining a satisfactory grass turf acceptable to the Owner, or as otherwise shown on the drawings.

7.0 TREE REMOVAL

No trees, except those specifically shown on the drawings to be removed, shall be removed without the express approval of the Engineer. Removed trees will be disposed of off the work site by the Contractor.

Where construction passes under the drip line of hardwood trees and 12" plus diameter pine, the Contractor shall protect the trees from damage during construction.

In general, the Contractor shall hand dig as required and shall not cut any root 4" and larger. Recompact soil after construction by hand, if necessary to protect the root system.

8.0 PRESERVATION OF DRAINAGE DITCHES

After backfilling of excavations, restore all drainage ditches destroyed, damaged, or otherwise modified during construction to a condition equivalent to the condition of the ditch before construction. Ditches so reconstructed shall be built in their original locations and cross-section or as otherwise shown on the drawings.

9.0 FINISHING OF SITE, BORROW AND STORAGE AREAS

Upon completion of the project, all areas used by the Contractor shall be properly cleared of all temporary structures, rubbish, and waste materials and properly graded to drain and blend in with the adjoining property. Areas used for the deposit of waste materials shall be finished to property drain and blend with the surrounding terrain.

10.0 STREET CLEANUP DURING CONSTRUCTION

Tracking or dropping of dirt or other materials from the site onto any public or private street shall be minimized. The Contractor shall clean all spilled dirt, gravel, or other foreign material caused by the construction operations from all streets and roads at the conclusion of each day's operation.

11.0 PAYMENT

The work specified in this section shall be considered incidental and the cost shall be included as part of the appropriate lump sum or unit prices stated in the Bid.

SECTION 01230
ALTERNATES

1.0 GENERAL

1.1 Alternates Requirements

A. This section identifies each Alternate and describes basic changes to the Work only when that Alternate is made a part of the Work by specific provisions in the Agreement.

B. This section includes only the non-technical descriptions of the Alternates. Refer to the specific Sections of Divisions 2 through 16 of the Specifications for technical descriptions of the Alternates.

C. The Base Bid and Alternates shall include the costs of all supporting elements required, so that the combination of the Lump Sum Base Bid and any Alternates shall be complete. The scope of Work for all Alternates shall be in accordance with applicable Drawings and Specifications.

D. The Base Bid shall include all Work included in the Drawings and Specifications except work described as Alternates. Each Alternate is intended to cover all of the Work required for a complete finished job.

E. The Base Bid and the Alternates are exclusive in their scope. There is no overlap between or among the Base Bid and Alternates. The cost of any item of Work shall be included only once, in the Base Bid or in the Alternates.

F. Coordination of related Work and modifications to surrounding Work as required to properly integrate each Alternate, and to provide the complete construction required by the Contract Documents, is the responsibility of the Contractor.

G. Bidders shall submit bids for the Base Bid and all requested Alternates as listed on the Bid Form. Failure to quote an amount of the insertion of the words "no bid". "none" or words of similar import, will be considered as not completing the proposal and may constitute disqualification of the entire bid. When there is no change in the base bid due to using the Alternate, the words "No Change" should be used. The words "No Change" will be interpreted to mean that the Work described in the Alternate shall be completed at no adjustment or change in the cost of the Base Bid.

H. Except as otherwise specifically provided in Section 1.2, the Work described in Alternates shall be completed with no increase in Contract Time.

I. All Alternates amounts shall be quoted in the appropriate spaces provided on the Bid form.

J. The Owner reserves the right to award none, any one or more selected in any order, or all of the Alternates in combination with the work covered by the Base Bid. Alternates will not be awarded without awarding the Base Bid.

K. The Owner reserves the right to determine the low Bid as the Base Bid alone or the sum of the Base Bid and any combination of Alternates it chooses to award.

1.2 Related Sections

The definition of each Alternate references the related sections.

1.3 Description of Alternates

A. ALTERNATE NO. 1:

Contractor shall submit a lump sum bid in accordance with the bid form included in the contract documents. Alternate No. 1 shall include clearing and grubbing of the proposed site, grading the site to a level surface using native material or imported material if authorized by the Engineer, providing and constructing a 30'W 140'L Treated Timber Pole Barn with a clear eave height of 14'. Bid price shall include materials, labor and all incidental items to complete a fully functional system, including providing engineered drawings, for both the pole barn and the column foundations, stamped by an Engineer registered in the State of Mississippi.

B. For each alternate defined above, the specifications and design criteria in this Project Manual shall apply to both design concepts.

a. No extension of time will be granted if this Alternate is accepted, unless demonstrated by the Contractor, the acceptance of this alternate will delay the overall project completion due to reasons beyond the control of the Contractor.

b. The Owner reserves the right to accept Alternates within thirty (30) days after the date of the Agreement.

2.0 PRODUCTS (Not Used)

3.0 EXECUTION (Not Used)

4.0 PAYMENTS

Payment for work in this section shall be included in the lump sum or unit price bid to which it is subsidiary.

SECTION 01300
SUBMITTALS DURING CONSTRUCTION

1.0 GENERAL

1.1 This section outlines in general the items that the Contractor must prepare or assemble for submitting during the progress of the work. There is no attempt herein to state all of the procedures and requirements for each submittal. The Contractor's attention is directed to the individual specification sections in these Contract Documents which may contain in detail additional and special submittal requirements. The Engineer reserves the right to direct and modify the procedures and requirements for submittals as necessary to accomplish the specified purpose of each submittal. Should the Contractor be in doubt as to the procedure, purpose, or extent of any submittal, he should direct his inquiry to the Engineer.

1.2 Submittals to the Engineer shall be addressed to:

Compton Engineering, Inc., PO Box 2795, Bay St. Louis, MS 39521

1.3 For submittals required with this Bid, see Sections INSTRUCTIONS TO BIDDERS and SUPPLEMENTARY CONDITIONS.

2.0 ADMINISTRATIVE SUBMITTALS

2.1 The Contractor shall provide all of the submittals required by the Bidding Requirements, the GENERAL CONDITIONS, the SUPPLEMENTARY CONDITIONS, Division 1, GENERAL REQUIREMENTS, and as may be specifically required elsewhere in these Contract Documents.

2.2 The Contractor shall make required submittals promptly. Failure to comply with this requirement may result in the withholding of progress payments and make the Contractor liable for other prescribed action and sanctions.

2.3 The Contractor shall submit to the Engineer a copy of all correspondence relative to the Contract, transmitting notifications, reports and certifications. Costs for reproductions shall be considered incidental and included in the Contractor's Bid.

3.0 TECHNICAL SUBMITTALS

3.1 General

3.1.1 Requirements in this section are in addition to any specific requirements for submittals specified in other divisions and sections of these Contract Documents.

3.1.2 Data submitted shall have sufficient detail for determination of compliance with the Contract Documents.

3.1.3 Review of substitutions, schedules and lists of materials submitted or requested by the Contractor shall not add to the Contract amount, and any additional costs that may result therefrom shall be solely the obligation of the Contractor.

3.1.4 The Owner shall not be responsible for providing engineering or other services to protect the Contractor from additional costs accruing from such approvals.

3.1.5 The Owner is not precluded, by virtue of review, acceptance, or approval, from obtaining a credit for construction savings resulting from allowed concessions in the work or materials therefore.

3.1.6 No equipment or material for which listings, drawings, or descriptive material are required shall be fabricated,

purchased, or installed until the Engineer has on hand copies of such approved lists and the appropriately stamped final shop drawings.

3.1.7 Submittals will be acted upon by the Engineer as promptly as possible, and in all cases within 20 days of receipt and returned to the Contractor. Delays caused by the need for resubmittals shall not constitute reason for an extension of Contract time.

3.2 Samples and Specimens

3.2.1 Where required in the specifications, and as determined necessary by the Engineer, test specimens or samples of materials, appliances, and fittings to be used or offered for use in connection with the work shall be submitted to the Engineer, at the Contractor's expense, with information as to their sources, with all cartage charges prepaid, and in such quantities and sizes as may be required for proper examination and tests to establish the quality or equality thereof, as applicable.

3.2.2 All samples and test specimens shall be submitted in ample time to enable the Engineer to make any tests or examinations necessary without delay to the work. The Contractor will be held responsible for any loss of time due to his neglect or failure to deliver the required samples and test specimens to the Engineer, as specified.

3.2.3 The Contractor shall submit additional samples and test specimens as required by the Engineer to assure equality with the original approved sample and/or determination of specification compliance.

3.2.4 The Contractor shall cooperate with the laboratory personnel and provide access to the work to be tested. The Contractor shall notify the laboratory sufficiently in advance of operations to allow scheduling of tests. The Contractor shall furnish labor and facilities to obtain and handle samples at the site and to store and cure test samples as required.

3.2.5 Any testing laboratory utilized by the Contractor shall be an independent laboratory acceptable to the Owner and the Engineer and complying with the latest edition of the "Recommended Requirements for Independent Laboratory Qualification", published by the American Council of Independent Laboratories. The samples furnished and the cost of the laboratory services shall be at the expense of the Contractor.

3.2.6 Testing laboratories, whether provided by the Owner or the Contractor, shall promptly notify the Engineer and the Contractor of irregularities or deficiencies of work which are observed during performance of services. Laboratories shall submit two copies of all reports directly to the Engineer and two copies to the Contractor. The samples furnished and the cost for the laboratory services shall be at the expense of the Contractor.

3.2.7 Laboratory tests and examinations not required by the Contract Documents will be made at no cost to the Contractor, except that, if a sample of any material or equipment proposed for use by the Contractor fails to meet the specifications, the cost of testing subsequent samples shall be borne by the Contractor.

3.2.8 Sample items (fixtures, hardware, etc.) may be incorporated into the work upon acceptance of the items and when no longer needed by the Engineer for reference.

3.3 Shop Drawing and Submittal

3.3.1 The Contractor shall submit to the Engineer for his review, nine copies, including one reproducible copy of submittals larger than 11"x17" of shop drawings and catalog cuts for fabricated items and be accurate, distinct, and complete, and shall contain all required information, including satisfactory identification of items, units, and assemblies in relation to the applicable parts of these Contract Documents.

3.3.2 Unless otherwise approved by the Engineer, shop drawings shall be submitted only by the Contractor, who shall indicate by a signed stamp on the shop drawings, or other acceptable means, that he (the Contractor) has checked and approved the shop drawings, and that the work shown is in accordance with the Contract Documents and has been checked for dimensions and relationship with other work. The practice of submitting incomplete or unchecked shop drawings for the Engineer to correct or finish will not be acceptable, and shop

drawings which, in the opinion of the Engineer, indicate that they have not been checked by the Contractor will be returned to the Contractor for resubmission in the proper form.

3.3.3 When shop drawings have been reviewed, two sets of submittals will be returned to the Contractor appropriately stamped. If major changes or corrections are necessary, the shop drawings may be rejected and one set will be returned to the Contractor with such changes or corrections indicated, and the Contractor shall correct and resubmit the shop drawings in the same manner and quantity as specified for the original submittal, unless otherwise directed by the Engineer. If changes are made by the Contractor (in addition to those requested by the Engineer) on the resubmitted shop drawings, such changes shall be clearly explained by the Contractor in a transmittal letter accompanying the resubmitted shop drawings.

3.3.4 The review of shop drawings and catalog cuts by the Engineer will not relieve the Contractor from responsibility for correctness of dimensions, fabrication details, and space requirements, or for deviations from the drawings or specifications, unless the Contractor has called attention to such deviations in writing by a letter accompanying the shop drawings and the Engineer approves the change or deviation in writing at the time of submission; nor shall review by the Engineer relieve the Contractor from the responsibility for errors in the shop drawings. When the Contractor does call such deviations to the attention of the Engineer, the Contractor shall state in his letter whether or not such deviations cause any deduction or extra cost adjustment.

3.3.5 The Contractor agrees that shop drawing submittals processed by the Engineer do not become Contract Documents and are not Change Orders; that the purpose of the shop drawing review is to establish a reporting procedure and is intended for the Contractor's convenience in organizing his work and to permit the Engineer to monitor the Contractor's progress.

3.4 Shop Drawing Requirements

3.4.1 Shop drawings referred to herein shall include shop drawings and other submittals for both shop and field fabricated items. The Contractor shall submit, as applicable, the following for all prefabricated or manufactured equipment, materials and systems:

3.5 General

3.5.1 Shop drawings or equipment drawings, including dimensions, size and location of connections to other work, and weight of equipment.

3.5.2 Catalog information and cuts.

3.5.3 Installation or placing drawings for reinforcing steel or miscellaneous metals.

3.5.4 Supporting calculations for equipment and associated supports, or hangers required or specified to be designed by equipment manufacturers or suppliers.

3.5.5 Suggested spare parts list with current price information.

3.5.6 List of special tools required for checking, testing, parts replacement, and maintenance. (Special tools are those which have been specially designed or adapted for use on parts of the equipment, and which are customarily and routinely carried by maintenance mechanics.)

3.5.7 List of special tools furnished with the equipment.

3.5.8 List of materials and supplies required for the equipment prior to and during startup.

3.5.9 List of materials and supplies furnished with the equipment.

3.5.10 Samples of finish colors for selection.

3.5.11 Special handling instructions.

3.5.12 Requirements for storage and protection prior to installation.

3.5.13 Requirements for routine maintenance.

3.5.14 List of all requested exceptions to the Contract Documents.

3.5.15 The submittals shall include satisfactory identification of items, units, and assemblies in relation to the specification section number.

3.5.16 Should the Contractor propose any item on his shop drawings, or incorporate an item into the work, and that item should subsequently prove to be defective or otherwise unsatisfactory, the Contractor shall, at his expense, replace the item with another item that will perform satisfactorily.

3.6 Record Drawings

3.6.1 The Contractor shall maintain two sets of full size prints on the jobsite, one set designated "Job Progress Drawings" and the second set designated "Record Drawings". The Contractor shall contemporaneously maintain both sets in a condition which reflects the current status of the construction work. Both sets shall be available to the Engineer for inspection and copying during the progress of the work. All markings shall be neatly performed with red pencil.

3.6.2 The Record Drawings will be marked up as required to show all deviations from the original contract drawings including changes resulting from minor field adjustments, field orders, and Contract modifications. Changes should be drawn after the construction work is completed and all new locations, dimensions, and elevations shall be shown. Where larger scale presentation is required, the Contractor shall prepare additional drawings and attach them to the appropriate prints.

3.6.3 Each month, or as otherwise agreed, the Contractor shall submit to the Engineer, a current listing and description of each deviation incorporated into the work since the preceding submittal.

3.6.4 Failure to submit the record drawing information shall be cause for withholding any partial payment due the Contractor.

3.6.5 The Job Progress Drawings shall be marked up to show all work complete in weekly intervals, and the week the work is performed shall be shown.

3.6.6 At the completion of the work but before Substantial Completion, both the Job Progress Drawings and Record Drawings sets of prints shall be submitted to the Engineer.

3.7 Operation and Maintenance (O&M) Manuals

3.7.1 The Engineer will submit to the Contractor a list of equipment items requiring O&M Manual submittal.

3.7.2 The Contractor shall furnish one original and eight copies of a complete manual containing installation, operation, maintenance, and lubrication requirements for each component of mechanical and electrical equipment or system plus one reproducible copy of all submittals larger than 11"x17". The production quality shall be equivalent to offset printing. If offset printed (or equivalent) materials are not available, photocopying from original documents using a properly adjusted plain paper copier will be accepted. However, photocopies of materials containing photographs will not be accepted. It is understood that the Owner has the right to produce additional copies for his own use. All equipment manufacturers and/or suppliers shall be made award of these requirements and all associated costs shall be included in the costs for furnishing the equipment or system.

3.7.3 Two copies of a preliminary O&M Manual shall be submitted to the Engineer for review within 30 days

following receipt of the initial shop drawing submittal containing the Engineer's review comments. The final copies of the O&M Manual shall be submitted to the Engineer at the time the equipment is delivered to the jobsite. No partial payments (or additional partial payments, where payments were made for undelivered specially manufactured equipment) will be made to the Contractor for equipment delivered or stored until acceptable final O&M Manuals for that equipment are received. Failure to comply with this section shall allow the Owner to withhold all partial payments to the Contractor in excess of 75 percent of the contract amount until the O&M Manuals due under this section has been reviewed and accepted. In addition, for the purpose of the definition of "Substantial Completion" contained in the General Conditions, Substantial Completion on the whole or any portion of the work does not exist until the required O&M Manuals have been accepted by the Engineer.

3.7.4 Each O&M Manual shall include, but not be limited to, the following:

3.7.5 Diagrams and illustrations

3.7.6 Detailed description of the function of each principal component of the system

3.7.7 Performance and nameplate data

3.7.8 Installation instructions

3.7.9 Procedure for starting

3.7.10 Proper adjustment

3.7.11 Test procedures

3.7.12 Operating procedures

3.7.13 Shutdown instructions

3.7.14 Emergency operating instructions and troubleshooting guide

3.7.15 Safety precautions

3.7.16 Bill of material/parts list

3.7.17 Maintenance and overhaul instructions shall include detailed assembly drawings with part numbers, parts list, instructions for ordering spare parts, and complete preventive maintenance instructions required to assure satisfactory performance and longevity of the equipment.

3.7.18 Lubrication instructions shall list points to be greased or oiled; shall recommend type, grade and temperature range of lubricants; and shall recommend frequency of lubrication.

3.7.19 The O&M Manual submittal shall be preceded by an Equipment Data Form, completely filled out (see following section), bound with a binder clip and placed in an expansion type manila file pocket. Each file pocket shall be clearly labeled with the equipment description and tag number. The file pockets shall be submitted to the Engineer in similarly labeled expanding wallets with ties.

3.7.20 Whenever possible, material shall be 8-1/2 inches by 11 inches or 11 inches by 17 inches Z-folded to 8-1/2 inches by 11-inches. If necessary, materials larger than 11 inches by 17 inches may be provided. They shall be folded to approximately 8-1/2 inches by 11 inches so that the title block is clearly visible without unfolding.

3.7.21 All material shall be tailored to the specific function that the equipment serves in the facility. If material covers more than one product type or includes equipment information not relevant to the project, the applicable information for the equipment supplied shall be clearly indicated by highlighting the information using a yellow felt tip marked manufactured for that purpose.

3.7.22 Highlighting that obliterates the information when photocopied is not acceptable. The relevant information shall also be indicated by an arrow located in the margin. If catalog cuts are included in the submittal, the catalog name and number, and the company name, address and telephone number shall be provided on the catalog cut or typewritten on a separate sheet of paper.

3.8 Equipment Data Forms

3.8.1 As part of the O&M Manual submittal, the Contractor shall provide an Equipment Data Form completely filled out for each equipment item. Sample equipment data forms will be found at the end of this section. The equipment data shall be typewritten on printed forms available from the Engineer and submitted with the O&M Manual for review by the Engineer. The manufacturer's standard form, or photocopies of the sample form, will not be acceptable as a substitute for the printed forms.

3.8.2 The term "Maintenance Operation" as used in the equipment data forms shall be understood to mean any routine operation required to assure the satisfactory performance and longevity of the equipment. Examples of typical Maintenance Operations are lubrication and routine adjustments. The maintenance summary portion make take as many pages as required. However, the order and format shown must be adhered to. Only 8-1/2 inch by 11 inch paper will be accepted. The maintenance operations and their frequencies must be typed on the forms.

3.8.3 In completing the recommended spare parts list, the data provided in the "part number" and "description" columns shall be consistent with the terminology used in the equipment manufacturer's Bill of Material/Parts List provided with the O&M Manuals. Spare parts provided by this Contract must be identified by placing two asterisks after the part number.

3.9 Samples and Test Specimens

3.9.1 Where required in the specifications, and as determined necessary by the Engineer, test specimens or samples of materials, appliances, and fittings to be used or offered for use in connection with the work shall be submitted to the Engineer, at the Contractor's expense, with information as to their sources, with all cartage charges prepaid, and in such quantities and sizes as may be required for proper examination and tests to establish the quality or equality thereof, as applicable.

3.9.2 All samples and test specimens shall be submitted in ample time to enable the Engineer to make any tests or examinations necessary without delay to the work. The Contractor will be held responsible for any loss of time due to his neglect or failure to deliver the required samples and test specimens to the Engineer, as specified.

3.9.3 The Contractor shall submit additional samples and test specimens as required by the Engineer to assure equality with the original approved sample and/or determination of specification compliance.

3.9.4 The Contractor shall cooperate with the laboratory personnel and provide access to the work to be tested. The Contractor shall notify the laboratory sufficiently in advance of operations to allow scheduling of tests. The Contractor shall furnish labor and facilities to obtain and handle samples at the site and to store and cure test samples as required.

3.9.5 Any testing laboratory utilized by the Contractor shall be an independent laboratory acceptable to the Owner and the Engineer and complying with the latest edition of the "Recommended Requirements for Independent Laboratory Qualification", published by the American Council of Independent Laboratories. The samples furnished and the cost of the laboratory services shall be at the expense of the Contractor.

3.9.6 Testing laboratories, whether provided by the Owner or the Contractor, shall promptly notify the Engineer and the Contractor of irregularities or deficiencies of work which are observed during performance of services. Laboratories shall submit two copies of all reports directly to the Engineer and two copies to the Contractor. The samples furnished and the cost for the laboratory services shall be at the expense of the Contractor.

3.9.7 Laboratory tests and examinations not required by the Contract Documents will be made at no cost to the Contractor, except that, if a sample of any material or equipment proposed for use by the Contractor fails to meet the specifications, the cost of testing subsequent samples shall be borne by the Contractor.

3.9.8 Sample items (fixtures, hardware, etc.) may be incorporated into the work upon acceptance of the items and when no longer needed by the Engineer for reference.

3.10 Certificates of Compliance

3.10.1 A Certificate of Compliance shall be furnished for materials specified to a recognized standard or code prior to the use of any materials specified for the work. The Engineer may permit the use of certain materials or assemblies prior to sampling and testing if accompanied by a Certificate of Compliance. The Certificate shall be signed by the manufacturer of the material or the manufacturer of assembled materials and state that the materials comply in all respects with the requirements of the specifications. A Certificate of Compliance shall be furnished with each lot of material delivered to the work and the lot so certified shall be clearly identified in the Certificate.

3.10.2 All material used on the basis of a Certificate of Compliance may be sampled and tested at any time. The fact that material is used on the basis of a Certificate of Compliance shall not relieve the Contractor of responsibility for incorporating material in the work that conforms to the requirements of the Contract Documents and any such material not conforming to the requirements will be subject to rejection whether in place or not.

3.10.3 The Engineer reserves the right to refuse permission for use of material on the basis of a Certificate of Compliance.

4.0 PAYMENT

4.1 No separate payment shall be made for work under this section. Payment for work in this section shall be included in the lump sum or unit price bid to which it is subsidiary.

SAMPLE EQUIPMENT DATA FORM

PROJECT NAME: _____

CONTRACT NO. _____

CONTRACTOR _____

EQUIPMENT NO. _____

DESCRIPTION _____

LOCATION _____

MANUFACTURER _____

PURCHASED FROM _____ PURCHASE DATE _____

VENDOR ORDER NO. _____ PURCHASE PRICE _____

LOCAL SUPPLIER _____ PHONE _____

ADDRESS _____

MODEL NO. _____ SHIPPING WT/UNIT _____

NO. OF UNITS _____ SERIAL NOS. _____

MAINTENANCE REQUIREMENTS/
MANUFACTURERS SPECIFICATIONS

EQUIPMENT NO. _____

DESCRIPTION _____

MAINTENANCE OPERATION	FREQENCY
List briefly each maintenance operation required and refer to specific information in manufacturer's manual, if applicable. Refer by symbol to "Lubricant List" for Lubrication Operation	List required frequency of each maintenance operation

LUBRICANT LIST

REFERENCE SYMBOL	LUBRICANT TYPE (MILITARY STANDARD)	RECOMMENDED LUBRICANT AND MANUFACTURER
List symbols in "maintenance operation"	List general lubricant type	List specific lubricant name, viscosity, and manufacturer

RECOMMENDED SPARE PARTS LIST

EQUIPMENT NO. _____

DESCRIPTION _____

PART NO.	DESCRIPTION	UNIT	QUANTITY	UNIT COST

ADDITIONAL DATA AND REMARKS:

SECTION 01310
PROJECT MANAGEMENT & COORDINATION

1.0 OPERATION OF EXISTING SYSTEM PROHIBITED (N/A)

2.0 PROGRESS OF THE WORK

2.1 General

2.1.1 The work shall be performed at such times and in or on such parts of the project and with such forces, materials and equipment to prevent any delay to the completion of the project within the time limits stated in the Contract and in conformance with the Overall Construction Schedule specified herein.

2.1.2 The Contractor may, with written permission of the Owner and acquisition of all necessary permits and at his expense, work, outside regular hours of 7 a.m. and 8 p.m. He shall submit a written request to the Engineer and allow 7 days for satisfactory arrangements to be made for inspecting the work in progress. The Contractor shall comply with all applicable requirements of the Owner.

3.0 OVERALL CONSTRUCTION SCHEDULE

3.1 General

A. The Contractor shall prepare and submit to the Engineer within 10 days after the Notice to Proceed and before starting construction, his Overall Construction Schedule (Overall Schedule). The Overall Schedule shall be comprised of preparatory and construction to operations covering all work to be done in connection with the Contract.

B. The original of the Overall Schedule shall be drawn on 22 inch by 34 inch reproducible media. The Overall Schedule shall be in the form of a time-scaled bar chart showing bid items and other activities identified herein. Each activity shall be labeled with a complete description and the estimated duration in days. The Contractor shall sign and provide the Engineer for his review and/or rejection as appropriate, three copies of the initial and each revision of the Overall Schedule.

C. Whenever under any Contract Documents, the Engineer is given the right of review or rejection of Contractor's schedules or changes thereto, such right is for the benefit of or service to the Contractor. Comments made by the Engineer on the schedule, or lack of such comments, or rejection or non-rejection of the Contractor's schedule does not relieve the Contractor from compliance with requirements of the Contract Documents, nor do they create any responsibility or duty for scheduling owed from the Owner, or the Engineer to the Contractor. This review, whether accompanied by comments, rejection, or neither, is only for general conformance with the schedule concept of the project and general compliance with the information given in the Contract Documents.

D. Failure to submit the Overall Schedule or subsequent updates of the schedule shall be considered cause for withholding any partial payments due or that may be become due under the Contract in accordance with the General Conditions.

3.2 Activities

An activity is defined as a time and/or resource consuming element of work. The activities selected for inclusion in the Overall Schedule shall be discrete. When necessary, discrete activities shall be subdivided into smaller, discrete activities so that the dependency relationships may be shown. The level of detail shall be sufficiently fine to enable the Engineer to determine that the project has been adequately planned and to facilitate the determination of real progress as the work is prosecuted. Activity durations exclusion of those for "Submittal Preparation by the Contractor", "Review by the Engineer" and "Material Fabrication and Delivery" shall not be less than one or more than 21 days, unless otherwise approved by the Engineer. Allowance for inclement weather shall be factored into each activity where appropriate. The days and number of shifts necessary to accomplish each work activity shall be

shown with each work activity.

The Overall Schedule shall indicate the description, duration and sequence of work activities. It shall include, but not be limited to, the following items as appropriate to this Contract:

1. Mobilization and move in.

2. Shop drawing preparation by the Contractor and review by the Engineer. See Section SUBMITTALS DURING CONSTRUCTION.

3. Material and equipment.

    a. Order.
    b. Delivery.
    c. Installation.

4. Site Grading.

5. Utility Installation.

6. Concrete Foundation and Slab Construction.

7. Phased Building Construction and Interior Finishes to reflect partial occupancy dates.

8. Plumbing.

9. Mechanical.

10. Electrical.

11. Floor Finishes.

12. Topsoil, Finish Grading and Grassing.

11. Substantial completion and final completion dates.

12. Final cleanup and demobilization.

The Contractor shall prepare Progress Quantity Chart. The chart shall match the Overall Schedule in time. The chart shall show the average feet per day for each major condition expected and the cumulative feet of progress to date throughout the construction. Average rates and cumulative curves shall be shown on each chart for initial projected progress, actual progress and revised projected progress.

3.3 Contingency

Any contingency within the schedule, i.e, a difference in time between the project's early completion and required contract completion date and float in the Overall Schedule, will belong to the project and not to any of the parties of the Contract.

3.4 Float

The Contractor shall not be permitted to sequester shared float through such strategies as extending duration estimates to consume available float time or extensive crew/resource sequencing, etc.

3.5 Progress Review Meeting

A. At least twice each month on a date established by the Engineer, a meeting will be held at which time the schedule will be reviewed. The meeting shall be attended by the Contractor's project manager and superintendent and those

major subcontractors as determined by the Engineer to be necessary at the time.

B. Prior to the meeting, the Contractor shall obtain information to update the Overall Schedule to reflect progress to date. The updated schedule shall be available at the meeting for review. To update the Overall Schedule, the Contractor shall:

Enter actual start and completion dates, days, number of shifts used for those activities started and/or completed during the previous reporting period.

For activities in progress, indicate the percentage complete to date. Review and revise as necessary the remaining duration of the work from the update to the estimated completion date.

For activities not yet started, review and revise as necessary the durations and estimated start and completion dates.

Add authorized Change Orders.

Update status information shall be annotated on the Overall Schedule in a manner that the Overall Schedule shall graphically depict the current status of the work.

C. The monthly submittal to the Engineer shall be accompanied by a Narrative Report. The Narrative Report shall be brief and include the information described in the Narrative Report Outline bound at the end of this section.

If at any time during the project, the Contractor fails to complete any activity by its latest completion date, he will be required, within 7 days, to submit to the Engineer a written statement as to how and when he plans to reorganize his work force to return to the current Overall Schedule.

Whenever it become apparent from the current monthly progress evaluation and updated schedule data that the Contract completion date will not be met, the Contractor shall take some or all of the following actions:

1. Increase construction manpower in such quantities and crafts as shall substantially eliminate the backlog of work.

2. Increase the number of working hours per shift, shifts per work day, work days per week, or the amount of construction equipment or any combination of the foregoing sufficient to substantially eliminate the backlog of work.

3. Reschedule work items to achieve concurrency of accomplishment.

The addition of equipment or construction forces, increasing the working hours or any other method, manner or procedure to return to the current Overall Schedule shall not be considered justification for a Change Order or treated as an acceleration order.

3.6 Cash Flow

With the initial Overall Schedule submittal and each monthly update, the Contractor shall also submit a cash flow summary. The cash flow summary shall be based on the submitted Overall Schedule and equal in total the Contractors bid plus approved Change Orders. Excepted payment requests for each month shall be included, as well as the cumulative payment requests to date for each month of the project. The net month payment request and cumulative payment requests to date shall also be shown after deducting retainage. The Contractor, at the preconstruction conference, shall explain in detail the procedure to be used to develop the cash flow summary. This procedure is subject to the review of the Engineer. Failure to submit an acceptable cash flow summary shall be considered cause for withholding any partial payments due or that may become due under the Contract.

4.0 PRECONSTRUCTION CONFERENCE

4.1 Before beginning the work and after the Contract has been awarded, the Engineer will conduct a Preconstruction Conference to discuss construction schedules and procedures, Contractor's use of the site, Contractor's use of existing facilities, Owner's regulations, and other matters deemed relevant to the effective

performance of the work.

4.2 The conference will be attended by:

* Contractor's Office Representative.
* Contractor's General Superintendent.
* Any subcontractor's or supplier's representative whom the Contractor may desire to invite or the Engineer may request.
* The Owner's Representatives.

5.0 PAYMENT

5.1 No separate payment shall be made for work under this section. Payment for work in this section shall be included in the lump sum or unit price work to which is subsidiary.

NARRATIVE REPORT OUTLINE

1. Contractor's transmittal letter.

2. Schedule narrative referring to each activity on the Overall Schedule including:

   a. Activities completed this reporting period.
   b. Activities in progress this reporting period.
   c. Activities schedule next reporting period.

3. Description of any problem areas.

4. Current and anticipated delays.

   a. Cause of the delay.
   b. Corrective action and schedule adjustments to correct the delay.
   c. Impact of the delay on other activities, milestones and completion dates.

5. Change in construction sequence.

6. Pending items and status thereof.

   a. Permits.
   b. Change Orders.
   c. Time extensions.
   d. Other.

7. Contract completion date status.

   a. Ahead of schedule and number of days.
   b. Behind schedule and number of days.

8. Other project or scheduling concerns.

9. Including reviewed and updated Overall Schedule.

10. Progress Quality Chart (if required).

11. Revised cash flow information.

12. Other.

SECTION 01500
TEMPORARY CONSTRUCTION FACILITIES & CONTROLS

1.0 GENERAL

1.1 Section Includes

1. Temporary Utilities: Electricity, lighting, ventilation, water, and sanitary facilities.
2. Temporary Controls: Enclosures and fencing, and protection of the Work.
3. Construction Facilities: Parking, progress cleaning, and temporary buildings.

1.2 Temporary Electricity

1. Cost: By Contractor; provide and pay for power service required from utility source.

1.3 Temporary Ventilation

1. Ventilate enclosed area to assist cure of materials, to dissipate humidity, and to prevent accumulation of dust, fumes, vapors, or gases.

1.4 Temporary Water Service

1. Contractor to pay cost of water used. Exercise measures to conserve water.
2. Extend branch piping with outlets located so water is available by hoses with threaded connections.

1.5 Temporary Sanitary Facilities

1. Provide and maintain required facilities and enclosures. Existing facility use is not permitted. Provide at time of project mobilization.

1.6 Barriers

1. Provide barriers to prevent unauthorized entry to construction areas and to protect existing facilities and adjacent properties from damage from construction operations.
2. Protect non-owned vehicular traffic, stored materials, site, and structures from damage.

1.7 Exterior Enclosures

1. Provide temporary weather tight closure of exterior openings to accommodate protection for Products, and to prevent entry of unauthorized persons. Provide access doors with self-closing hardware and locks.

1.8 Protection of Installed Work

1. Protect installed Work and provide special protection where specified in individual specification sections.
2. Provide temporary and removable protection for installed Products. Control activity in immediate work area to prevent damage.
3. Protect finished surfaces from dirt, wear, damage, or movement of heavy objects.

1.9 Security

1. Provide security and facilities to protect Work, existing facilities, and Owner's operations from unauthorized entry, vandalism, or theft.

2. Coordinate with Owner's security program.

1.10 Progress Cleaning and Waste Removal

1. Maintain areas free of waste materials, debris, and rubbish. Maintain site in a clean and orderly condition.

2. Collect and remove waste materials, debris, and rubbish from site periodically and dispose off-site.

2.0 PRODUCTS

Not Used

3.0 EXECUTION

Not Used

4.0 PAYMENT

The Work specified in this section shall be considered incidental, and the cost shall be included as part of the appropriate lump sum of unit prices stated in the Bid.

SECTION 01571
TEMPORARY SILT FENCE

1.0 GENERAL

1.1 Description. This work consists of furnishing, constructing and maintaining a water permeable filter type fence for the purpose of removing suspended soil particles from the water passing through it in accordance with the requirements shown on the plans and these specifications. Fence measured and paid as temporary shall be removed. It is understood that measurement and payment for silt fence will be made only when ordered and a pay item is included in the proposal. The quantities are estimated for bidding purposes only, and may be varied dependent upon actual conditions which occur during construction of the project.

2.0 MATERIALS

2.1 Geotextile fabric, posts, staples and woven wire backing, when required, shall meet the requirements of Section 02247.

3.0 EXECUTION

3.1 Placement of Fence: The silt fences shall be constructed at the locations shown on the plans or as directed by the Engineer. All posts shall be installed so that no more than three feet of the post shall protrude above the ground. Extra post for bracing shall be installed as directed by the Engineer. The woven wire shall be securely fastened to the wood posts with staples. When metal posts are used, the wire shall be fastened to the post with wire or other approved means. The geotextile shall be attached to the wire fence by wire or other approved means. The bottom edge of the geotextile shall be buried six inches below ground surface to prevent undermining. When splicing of the geotextile is necessary, two posts shall be installed approximately 18 inches apart and each piece of geotextile shall be fastened to both posts. The geotextile will be rejected if it has defects, rips, holes, flaws, deterioration, or damage incurred during manufacture, transportation, storage or installation. Type II geotextile may be installed without the woven wire fence backing provided all of the following conditions are met:

(a) Post spacing is reduced to six feet or less.
(b) The geotextile has been approved by the Engineer and the manufacturer recommends its use without the woven wire backing.
(c) Fence posts shall be inclined toward the runoff source at an angle of not more than 20° from vertical.
(d) Geotextile shall be attached to the posts in such manner that purpose intended is satisfied and maintained.

3.2 Maintenance and Removal: The Contractor shall maintain the silt fence and the geotextile shall be removed and replaced when deteriorated to such extent that it reduces the effectiveness of the silt fence. Excessive accumulations against the fence shall be removed and disposed of as directed by the Engineer. Unless otherwise directed, all temporary silt fences shall be removed. Upon removal, the Contractor shall remove and dispose of any excess silt accumulations, dress the area to give a pleasing appearance and vegetate all bare areas in accordance with the contract requirements. The temporary fence materials will remain the property of the Contractor and may be used at other locations provided the materials are acceptable to the Engineer.

4.0 MEASUREMENT AND PAYMENT

4.1 Payment for work in this section shall not be measured for separate payment but shall be included in the unit price to which it is subsidiary.

SECTION 01600
MATERIAL & EQUIPMENT SHIPMENT, HANDLING, PROTECTION & STORAGE

1.0 GENERAL

1.1 Section Includes:

1. Products.
2. Transportation and handling.
3. Storage and protection.

1.2 Products

1. Do not use materials and equipment removed from existing premises, except as specifically permitted by the Contract Documents.

1.3 Transportation and Handling

1. Transport and handle Products in accordance with manufacturer's instructions.
2. Promptly inspect shipments to ensure that Products comply with requirements, quantities are correct, and Products are undamaged.
3. Provide equipment and personnel to handle Products by methods to prevent soiling, disfigurement, or damage.

1.4 Storage and Protection

1. Store and protect Products in accordance with manufacturers' instructions.
2. Store with seals and labels intact and legible.
3. Store sensitive Products in weather tight, climate controlled, enclosures in an environment favorable to Product.
4. For exterior storage of fabricated Products, place on sloped supports above ground.
5. Cover Products subject to deterioration with impervious sheet covering. Provide ventilation to prevent condensation and degradation of Products.
6. Provide equipment and personnel to store Products by methods to prevent soiling, disfigurement, or damage.
7. Arrange storage of Products to permit access for inspection. Periodically inspect to verify Products are undamaged and are maintained in acceptable condition.

2.0 PRODUCTS

Not Used.

3.0 EXECUTION

Not Used.

SECTION 01700
CONTRACT CLOSEOUT

1.0 SCOPE

This section outlines the procedure to be followed in closing out all contracts.

2.0 SUBSTANTIAL COMPLETION

The substantial completion date for the Contract shall be established as stated in the General Conditions.

3.0 FINAL CLEANING

At the completion of work on all contracts and immediately prior to final inspection, cleaning of the entire project shall be accomplished according to the following provisions:

a. The Contractor shall remove all temporary structures and all debris, including all dirt, sand, gravel, rubbish and waste material. See Section TEMPORARY CONSTRUCTION FACILITIES AND UTILITIES.

b. Should the Contractor not remove rubbish or debris or not clean the site as specified above, the Owner reserves the right to have the cleaning done at the expense of the Contractor.

4.0 FINAL INSPECTION

After final cleaning and restoration and upon written notice from the Contractor that the work is completed, the Engineer will make a preliminary inspection with the Owner and Contractor present. Upon completion of this preliminary inspection, the Engineer will notify the Contractor, in writing, of any particulars in which this inspection reveals that the work is defective or incomplete.

Upon receiving written notice from the Engineer, the Contractor shall immediately undertake the work required by remedy deficiencies and complete the work to the satisfaction of the Engineer.

When the Contractor has corrected or completed the items as listed in the Engineer's written notice, he shall inform the Engineer, in writing, that the required work has been completed. Upon receipt of this notice, the Engineer, in the presence of the Owner and Contractor, will make his final inspection of the project.

Should the Engineer find all work satisfactory at the time of his inspection, the Contractor will be allowed to make application for final payment in accordance with the provisions of the General Conditions. Should the Engineer still find deficiencies in the work, the Engineer will inform the Contractor of the deficiencies and will deny the Contractor's request for final payment until such time as the Contractor has satisfactorily completed the required work.

The Contractor shall prepare a post construction video tape for record purposes following the same route as the preconstruction video.

5.0 FINAL SUBMITTALS

No application for final payment will be accepted until all of the following have been submitted as required in Section SUBMITTALS DURING CONSTRUCTION including, but not limited to, the following:

1. Final shop drawings.

2. All information required to prepare record drawings.

3. Final Video Tape Recordings (2).

6.0 GUARANTEES, BONDS AND AFFIDAVITS

No application for final payment will be accepted until all guarantees, bonds, certificates, licenses, and affidavits required for work or equipment as specified are satisfactorily filed with the Engineer.

7.0 RELEASE OF LIENS AND CONSENT OF SURETY

No application for final payment will be accepted until satisfactory evidence of Release of Liens and Consent of Surety to Final Payment has been submitted to the Owner.

8.0 FINAL PAYMENT

Final payment will be made to the Contractor in accordance with the General Conditions.

9.0 PAYMENT

The work specified in this section shall be considered incidental and payment will be included as part of the appropriate lump sum or unit prices stated in the Bid.

SECTION 02015
SITE PREPARATION

1.0 SCOPE

1.1 The work in this section shall consist of all mobilization and preparation, including minor grading, leveling, etc., as required by the Contractor to successfully complete the required work in a timely, orderly and safe fashion.

1.2 General:

1.2.1 Under no circumstances will Site Preparation begin prior to the Owner's written Notice to Proceed.

1.2.2 The limits of the project area are shown on the drawings. Any additional space required shall be secured by the Contractor.

2.0 MATERIALS, EQUIPMENT AND TEMPORARY FACILITIES

2.1 All materials and equipment delivered to the site will be stored in such a manner as to avoid unnecessary interference with ingress or egress to public and private properties.

2.2 The Contractor shall be responsible for providing all temporary facilities required for his use during construction, including temporary security fencing, parking, temporary utilities, etc.

3.0 WORKMANSHIP

3.1 Clearing of the site as required will be performed by the Contractor.

3.2 Layout of facilities shall be performed by the Contractor from the information shown on the drawings.

3.3 Obstructions:

3.3.1 Some obstructions may not be shown. Bidders are advised to carefully inspect the existing facilities before preparing their Bids. The removal and replacement of minor obstructions such as electrical conduits, water, waste piping, and similar items shall be anticipated and accomplished, even though not shown or specifically mentioned.

3.3.2 Major obstructions encountered that are not shown on the drawings, or could not have been foreseen by visual inspection of the site prior to bidding, should immediately be brought to the attention of the Engineer. The Engineer will make a determination for proceeding with the work. If the Engineer finds that the obstruction adversely affects the Contractor's costs or schedule for completion, a proper adjustment to the Contract will be made in accordance with the General Conditions.

4.0 PAYMENT

4.1 No separate payment shall be made for work under this section. Payment for work in this section shall be included in the lump sum or unit price bid to which it is subsidiary.

SECTION 02050
DEMOLITION

1.0 SCOPE

1.1 Work Included: This section covers the work necessary to remove all culverts, pipes, inlets, junction boxes, pavement, concrete, etc. and retire existing water lines, sewer lines, and manholes as shown on the drawings or required by construction.

1.2 General: Review with the Engineer the locations, limits, and measures and methods for accomplishing the work prior to commencing work under this section.

2.0 WORKMANSHIP

2.1 Pipe Removal: The pipes and miscellaneous items designated for removal or required to be removed for construction shall be removed and hauled from the site in such a manner as to minimize the impact of the construction and surrounding property owners.

2.1.1 Pipe Retirement: Pipe designated to be "Retired in Place" shall have all openings capped and shall be filled with flowable fill in such a manner as to leave no voids.

2.2 Concrete and Miscellaneous Work: When applicable, all concrete or junction boxes, inlets, or miscellaneous structures designated for removal shall be broken into 3'x3' maximum size and removed from the site. This shall also include walks, pavement, etc. which are either designated for removal or removal is required for installation of the work.

2.2.1 Manhole Retirement: Manholes designated to be "Retired in Place" shall be removed to a minimum of 3 feet below finished grade and backfilled as shown on the detail.

2.3 Asphalt Removal: When required, asphalt shall be removed subsequent to sawcutting and shall be hauled off site at the Contractor's expense.

2.4 Sawcutting: Prior to demolition, all asphalt, concrete, and cement shall be sawcut at the right of way line or as necessary to form a straight and continuous edge for future repair.

2.5 Wood Decking, Caps, etc.: Remove all decks, caps, stringers, rails, etc., which are required for completion of the project or designated for removal.

2.6 Piles: Piles designated for removal shall be either pulled or broken off 5' below the low water line. The low water line is defined as minus 1.5' MEAN SEA LEVEL DATUM.

2.7 Disposal: All materials shall be hauled off of the site and deposited in disposal sites which are licensed to handle such debris. All vehicles hauling the construction material shall abide by county, city, and state requirements for hauling construction debris.

3.0 PAYMENT

3.1 Payment for work in this section shall be included in the unit price / lump sum prices as outlined in the Bid. Bid price shall include all cost of labor, materials and incidentals complete.

SECTION 02070

SELECTIVE DEMOLITION

1 GENERAL

1.1 SUMMARY

1.1.1 This section covers the work necessary to demolish and remove all parts remaining from the existing pole barn designated to be replaced.

1.1.2 Related Sections:

1.1.2.1 Section 01300 – Submittals During Construction

1.1.2.2 Section 02202 – Flowable Fill

1.1.2.3 Section 02223 – Backfill

1.2 DEFINITIONS

1.2.1 R.O.W. – right of way

1.3 SYSTEM REQUIREMENTS

1.3.1 All asphalt paving and concrete structures designated for removal or removal is required for installation of the work shall be broken into 3 feet x 3 feet maximum size and removed from the site.

1.3.2 Disposal:

1.3.2.1 All materials shall be hauled off of the site and deposited in disposal sites which are licensed to handle such debris.

1.3.2.2 All vehicles hauling the construction debris shall abide by county, city, and state requirements for hauling construction debris.

1.3.2.3 Remove all hazardous materials from the worksite and dispose of in compliance with all applicable regulations, law and ordinances concerning removal, handling and protection against exposure or environmental pollution.

1.3.3 Reuse:

1.3.3.1 Where materials are to be reused or salvaged, carefully remove material and store as appropriate for future use requirement.

1.4 SUBMITTALS

. The following shall be submitted in accordance with Section 01300, in sufficient detail to show full compliance with the specification:

1.4.1. All manifests, weigh tickets and any other documentation related to the removal and disposal of any hazardous materials.

2 PRODUCTS

2.1 MATERIALS

2.1.1 Provide all equipment and materials, suitable and in adequate quantity, required to accomplish the work as specified herein.

3 EXECUTION

3.1 EXAMINATION

3.1.1 Review with the Engineer the location, limits and methods to be used prior to commencing the work under this section.

3.1.2 Removal and Salvage

3.1.2.1 Items designated to be "Removed and Salvaged" shall be removed so as not to cause any harm to the item. Salvaged items should be delivered to the Owner at the Owner's designated site.

4 PAYMENT

4.1 Payment for work in this section shall be included in the unit price or lump sum bid as outlined in the bid. Bid price shall include all cost of labor, materials, disposal and incidentals complete.

4.2 Payment will be made under:

Item	Description	Unit of Measurement
02070-A	Remove and Dispose of Existing Pole Barn	LS

* * END OF SECTION 02070 * *

SECTION 02110

CLEARING, GRUBBING, & STRIPPING

1. GENERAL

1.1. This section includes the work necessary to remove all interfering or objectionable material from the designated areas of work as required to accomplish the work.

1.1.1 This work shall also include the preservative from injury or defacement of all vegetation and existing objects designated to remain, as shown or as specified herein.

1.1.2 Review with the Engineer the location, limits and methods to be used prior to commencing the work under this section.

1.2 Definitions:

1.2.1 Clearing: Includes the cutting, removing, and disposing of trees, snags, stumps, shrubs, brush, limbs, and other vegetative growth, and shall be performed in such a manner as to remove all evidence of their presence from the surface and shall be inclusive of sticks and branches greater than 3 inches in diameter or thickness. Clearing shall also include the removal and disposal of trash piles, rubbish, and fencing; and the preservation of trees, shrubs, and vegetative growth which are not designated for removal.

1.2.2 Grubbing: Includes the removal and disposal of; wood or root matter below the ground surface remaining after clearing and stumps, trunks, roots, or root systems greater than 3 inches in diameter or of a size too large to mow or bush-hog."

1.2.3 Stripping: Includes the removal and disposal of all organic sod, topsoil, grass and grass roots, and other objectionable material remaining after clearing and grubbing from the construction areas. The exact depth of stripping will be determined by the Engineer, but in no case shall be less than 4 inches.

2. EXECUTION

2.1 Provide all materials, suitable and in adequate quantity, required to accomplish the work as specified herein.

2.2 Protect trees, shrubbery, and other vegetation not designated for removal from damage resulting from the work. Cut and remove tree branches only where, in the opinion of the Engineer, such cutting is necessary to effect construction operation. Remove branches other than those required to affect the work to provide a balanced appearance of any tree, as approved prior to removal. Scars resulting from the removal of branches shall be treated with an approved tree sealant.

2.3 Complete grubbing prior to the start of construction: Get Engineer's approval before

beginning excavation. Do not permit excavated materials to cover brush or trees prior to disposal.

2.4 Remove all clearing and grubbing debris from the worksite and dispose of in accordance with all local laws, codes and ordinances.

2.5 All areas shall be stripped as specified. Do not mix stripped material with borrow excavation. Borrow areas shall be stripped in stages so that no more stripping is done than absolutely necessary.

2.5.1 Topsoil from the stripped areas shall be stockpiled and used for the finished site grading. Excess topsoil will become the property of the Contractor and will be removed from the site.

2.6 Fence Removal:

2.6.1 In areas where fences impact construction, remove the fences. Remove only the interfering post or fence. Roll the fabric in a manner to facilitate re-stretching and refastening after construction.

2.6.2 Fences which parallel the work and impact construction shall be removed and replaced with new material which matches the existing fence .

2.6.3 The Contractor shall be responsible for disposal of all fabric, post, stretcher bars, etc.

3. PAYMENT

3.1 Payment for work in this section shall be included in the unit price as outlined in the Bid. Bid rice shall include all cost for labor, materials, fence removal and replacement and incidentals to complete.

3.2 Payment will be made under:

Item	Description	Unit of Measurement
02110	Clearing, grubbing and stripping	Lump sum

* * END OF SECTION 02110 * *

SECTION 02219
EXCAVATION AND EARTH FILL

1.0 SCOPE

1.1 This work shall consist of all excavation, filling, and grading necessary to construct the project to the lines, grades, thickness and cross-sections shown on the plans.

2.0 CLASS OF EXCAVATION

2.1 Unclassified Excavation - shall consist of the excavation and disposal of all materials of whatever character encountered with the project site.

2.2 Borrow Excavation - shall consist of approved materials obtained from borrow pits outside the limits of the project site and used for fill materials on culverts and other improvements.

3.0 SITE PREPARATION

3.1 Prior to commencing of excavation, the site to be excavated and the site to be filled shall be cleared and grubbed as set out in Section 02130, and the site preparation shall be approved by the Owner.

4.0 DEFINITIONS

4.1 Native Material - Bedding or backfill material obtained from on-site and/or trench excavations free from roots, debris, rocks larger than 3 inches and other deleterious materials.

4.2 Granular Fill - Clean excavated granular material or natural sand, free from roots and other organic material with a maximum material size for 1 inch, containing less than 15 percent by weight passing the No. 200 sieve.

4.3 Unsuitable Material - Any material obtaining cinders, ashes, refuse, vegetable or organic material, boulders, rocks or stones, frozen soils or other material that is determined to be unsuitable.

5.0 EXCAVATION

5.1 All suitable material removed from the excavation shall be used insofar as practicable in the construction of the earthfills and/or embankments required within the project site and such other purposes as directed. Excavation and disposal of materials shall be conducted in a manner, where practicable, that will make best use of excavated materials in construction of the fill.

5.2 Unsuitable material shall be excavated below the grade shown on the plans to such depth as may be directed by the Engineer to produce bearing soil. The area so excavated shall be backfilled with suitable fill material compacted to the density of the surrounding suitable soils.

5.3 Disposal of waste material shall be made by the Contractor at locations approved by the Owner within the project site and outside of the construction areas. Waste excavation shall be leveled and left in a neat condition. Spoil banks shall be located to permit surface drainage of surrounding area.

5.4 It shall be the responsibility of the Contractor to dewater any areas of excavation necessary.

6.0 EARTH FILL

6.1 Fill materials shall come from the required excavations and approved borrow areas. Fill material shall be free from sod, roots and other organic material.

6.2 No fill shall be placed until clearing and grubbing is complete, topsoil removed and any other unsuitable materials removed, all stump holes and depressions have been filled and compacted. Moisture content in the loosened material shall be controlled as required.

6.3 Where embankment is placed against slopes steeper than 4:1, benching may be required. Benching may also be required at grade point where the fill material does not bond well with the foundation material.

6.4 The placement of fill material shall be accomplished in uniform lifts or layers of soil not exceeding 8 inches loose thickness if compaction is to be accomplished with heavy equipment or four inches loose thickness if compaction is to be accomplished with hand operated equipment. Each lift shall be approximately horizontal and extending across full width of the fill. Each succeeding lift shall conform to the required density, stability, lines, grades and cross-section shown on the plans. Fill material dumped in piles shall be uniformly spread before compaction.

7.0 BORROW MATERIAL

7.1 When the quantities of suitable material obtained from the specified excavations are insufficient to construct the specified fills or when the material excavated on site is not suitable, additional materials shall be approved by the Owner as being satisfactory for the proposed use.

7.2 Unless otherwise designated, the Contractor shall make his own arrangements for obtaining borrow and shall pay all cost involved with no reimbursement of any of the cost from the Owner.

8.0 DITCHES AND SWALES

8.1 Ditches and swales shall be accurately cut to the section and grade shown on the plans. Sufficient undercut shall be made to allow for placement of sod where required. All suitable material excavated from ditches and swales shall be placed in fills. Spoils from ditch excavation shall be spread and leveled to blend with the ground contours and so as to present a well-drained and pleasing appearance.

9.0 MAINTENANCE

9.1 It shall be the Contractor's responsibility to properly and adequately maintain all portions of the work until acceptance by the Owner. He shall replace, restore, reconstruct, without extra compensation, any portion displaced or damaged due to carelessness or negligence of the Contractor's part including but not limited to failure to establish soil erosion protection in a timely manner.

10.0 PAYMENT

10.1 Measurement for Payment for any unit price line item of Unclassified Excavation or Select Fill shall be field measure (FM) as determined by calculations provided by the site superintendent and the Engineer's representative. An alternative method of measurement is by Average End Area method as determined by a qualified land surveyor contracted and compensated by the Contractor. This method of measurement shall not apply to Unclassified Excavation pertaining to establishment of roadside ditches, which shall be measure per linear feet of ditch.

10.2 Payment for work in this section will be included in the lump sum or unit price bid to which it is subsidiary.

SECTION 03300

STRUCTURAL CONCRETE AND REINFORCING

1 GENERAL

1.1 SUMMARY

This section includes the work necessary to furnish and install cast-in-place concrete construction for use in the foundations for the pole barn. The section scope of work includes:

- Construction of plain and reinforced concrete work.
- Sampling, testing, and inspecting concrete and concrete construction.
- Placement of anchor bolts and embedment's for structural items.
- Detailing, providing fabrication, and placing steel bar reinforcing, including reinforcing supports and accessories.
- Sealing floors in janitor's closets, mechanical closets and others as specified on the finish schedule.

1.2 REFERENCES

The publications listed below form part of this specification. Each publication shall be the latest revision and addendum in effect on the date this specification is issued for construction unless noted otherwise. Except as modified by the requirements specified herein or the details of the drawings, Work included in this specification shall conform to the applicable provisions of these publications.

1.2.1 ACI 211.1 - Selecting Proportions for Normal, Heavyweight, and Mass Concrete

1.2.2 ACI 211.2R - Selecting Proportions for Structural Lightweight Concrete

1.2.3 ACI 301 - Structural Concrete for Buildings

1.2.4 ACI 302.1R - Guide for Concrete Floor and Slab Construction

1.2.5 ACI 304R - Guide for Measuring, Mixing, Transporting, and Placing Concrete

1.2.6 ACI 304.2R - Placing Concrete by Pumping Methods

1.2.7 ACI 305R - Hot Weather Concreting

1.2.8 ACI 306R - Cold Weather Concreting

1.2.9 ACI 308.1 - Standard Specification for Curing Concrete

1.2.10 ACI 318 - Building Code Requirements for Reinforced Concrete & PCA Notes on ACI 318

1.2.11 ACI 347R - Guide to Formwork for Concrete

1.2.12 ACI 504R - Guide to Joint Sealents for Concrete Structures

1.2.13 ACI SP-15 - Structural Concrete - ACI 301-99 with Selected ACI and ASTM References

1.2.14 ACI SP-66 – ACI Detailing Manual

1.2.15 AISC 303 – Code of Standard Practice for Steel Buildings and Bridges

1.2.16 ASTM A82 - Steel Wire, Plain, for Concrete Reinforcement

1.2.17 ASTM A184 - Fabricated Deformed Steel Bar Mats for Concrete Reinforcement

1.2.18 ASTM A185 - Steel Welded Wire Reinforcement, Plain, for Concrete

1.2.19 ASTM A497 - Steel Welded Wire Reinforcement, Deformed, for Concrete

1.2.20 ASTM A615 - Deformed and Plain Carbon -Steel Bars for Concrete Reinforcement

1.2.21 ASTM A767 - Zinc-Coated (Galvanized) Steel Bars for Concrete Reinforcement

1.2.22 ASTM A775 - Epoxy-Coated Steel Reinforcing Bars

1.2.23 ASTM C33 - Concrete Aggregates

1.2.24 ASTM C40 - Organic Impurities in Fine Aggregates for Concrete

1.2.25 ASTM C88 - Soundness of Aggregates by Use of Sodium Sulfate or Magnesium Sulfate

1.2.26 ASTM C94 - Ready-Mixed Concrete

1.2.27 ASTM C109 - Compressive Strength of Hydraulic Cement Mortars (Using 2-inch or 50-millimeter Cube Specimens)

1.2.28 ASTM C117 - Materials Finer Than 75-Micrometer (Number 200) Sieve in Mineral Aggregates by Washing

1.2.29 ASTM C123 - Lightweight Particles in Aggregate

1.2.30 ASTM C128 - Specific Gravity and Absorption of Fine Aggregate

1.2.31 ASTM C136 Rev A - Standard Method for Sieve Analysis of Fine and Coarse Aggregates

1.2.32 ASTM C138 - Unit Weight, Yield, and Air Content (Gravimetric) of Concrete

1.2.33 ASTM C142 - Clay Lumps and Friable Particles in Aggregates

1.2.34 ASTM C150 - Portland Cement

1.2.35 ASTM C171 - Materials for Curing Concrete

1.2.36 ASTM C227 - Potential Alkali Reactivity of Cement - Aggregate Combinations (Mortar-Bar Method)

1.2.37 ASTM C260 - Air-Entraining Admixtures for Concrete

1.2.38 ASTM C289 - Potential Reactivity of Aggregates (Chemical Method)

1.2.39 ASTM C295 - Standard Guide for Petrographic Examination of Aggregates for Concrete

1.2.40 ASTM C309 - Liquid Membrane-Forming Compounds for Curing Concrete

1.2.41 ASTM C330 - Lightweight Aggregates for Structural Concrete

1.2.42 ASTM C494 - Chemical Admixtures for Concrete

1.2.43 ASTM C595 Rev A - Standard Specification for Blended Hydraulic Cements

1.2.44 ASTM C618 Rev A - Fly Ash and Raw or Calcined Natural Pozzolan for Use as a Mineral Admixture in Portland Cement Concrete

1.2.45 ASTM C1017 - Chemical Admixtures for Use in Producing Flowing Concrete

1.2.46 ASTM D512 - Standard Test Methods for Chloride Ion in Water

1.2.47 ASTM D994 - Preformed Expansion Joint Filler for Concrete (Bituminous Type)

1.2.48 ASTM D1056 - Flexible Cellular Materials - Sponge or Expanded Rubber

1.2.49 ASTM D1751 - Preformed Expansion Joint Filler for Concrete Paving and Structural Construction (Nonextruding and Resilient Bituminous Types)

1.2.50 ASTM E329 Rev. A - Standard Practice for Use in the Evaluation of Testing and Inspection Agencies as Used in Construction

1.2.51 NRMCA – Certification of Ready Mixed concrete Production Facilities, Ninth Edition, 2006

1.3 DEFINITIONS

1.3.1 ACI – American Concrete Institute

1.3.2 ASTM – American Society of Testing And Materials

1.3.3 NRMCA – national Ready Mix Concrete Asociation

1.3.4 VOC – volatile organic compound

1.4 SYSTEM REQUIREMENTS

1.4.1 Design Requirements

1.4.1.1 Concrete Strength

1.4.1.1.1 Unless shown otherwise on drawings, minimum 28-day compressive strength f '(c) shall be as follows:

1.4.1.1.1.1 Foundations: f '(c) = 4,000 psi

1.4.1.1.1.2 Slab-on-grade f '(c) = 4,000 psi

1.4.1.1.1.3 Structures; columns, beams, slabs: f '(c) = 4,000 psi

1.4.11..1.4 Underground duct envelopes: f '(c) = 2,000 psi

1.4.1.1.1.5 Fireproofing: f '(c) = 3,000 psi

1.4.1.1.2 If high early strength concrete is specified, compressive strength shall be 7-day strength.

1.4.1.2 Slump

1.4.1.2.1 Footings, piers, and walls: 2 inches to 4 inches.

1.4.1.2.2 Beams and columns: 1 inch to 4 inches.

1.4.1.2.3 Slabs: 2 inches to 4 inches.

1.4.1.2.4 Fireproofing and underground duct envelope: 4 inches to 6 inches.

1.4.1.2.5 Pours over 2.5 feet thick: 1 inch to 2- 1/2 inches.

1.4.1.2.6 Concrete containing high range water reducer:

1.4.1.2.6.1 When high range water reducer is added to maintain slump with lower water/cement ratio, slump shall be as specified in Section 2.3B.1 through 2.3B.5, of this specification, after addition of the reducer.

1.4.1.2.6.2 When high range water reducer is added to increase slump without changing water/cement ratio, slump before addition of reducer shall be as specified in Section 2.3B.1 through 2.3B.5, of this specification, and shall not exceed 8 inches after addition of reducer.

1.4.1.3 Water-Cement Ratio : Maximum 0.40 for water retaining (hydraulic) structures, 0.45 for other structures.

1.4.1.4 Formwork: Design and construction shall comply with Chapter 4 of ACI 301 and the building code of the local jurisdiction.

1.5 SUBMITTALS

The following shall be submitted in accordance with Section 01300, in sufficient detail to show full compliance with the specifications.

1.5.1 The Contractor shall submit 1 copy of the following documentation to the Engineer for review and approval 14 days prior to placing any concrete, or as required by Project requirements:

1.5.1.1 Mix Designs

1.5.1.1.1 Mix designs shall be proportioned in accordance with Chapter 3 of ACI 301. Submit mix designs for each combination of ingredients on each class of concrete for review.

☐1.5.1.1.2 Trial batch qualification test results, including standard deviation analysis.

☐1.5.1.1.3 Ingredients test results or certifications.

☐1.5.1.1.4 Compressive strength results.

☐1.5.1.1.5 Material suppliers, sources, properties, and certifications.

☐1.5.1.1.6 A copy of the current National Ready Mixed Concrete Association Certificate of Conformance for Concrete Production Facilities for Supplier's plants, if concrete is provided by a ready mixed concrete supplier.

1.5.1.2 Prior to the production of concrete, the Contractor shall submit to the Engineer for record only, 1 copy of Manufacturer's specifications with application and installation instructions for proprietary materials and items including bonding agents, form release agents, water stops, joint systems, chemical floor hardeners, dry shake finish materials, liquid curing compounds, and prepackaged repair materials. Also, include a statement showing product selections comply with VOC (Volatile Organic Compounds) and environmental regulations of the locality.

1.5.1.3 Prior to the production of concrete, the contractor shall submit a complete description of proposed curing methods.

1.5.1.4 A delivery ticket for each batch, conforming to Section 16 of ASTM C94 shall be given to the Engineer's representative at the point of delivery.

1.5.1.5 The laboratory shall submit compression test results to the Engineer on a weekly basis. Breaks of 500 psi below the specified design strength at 28 days shall be submitted on

the same day. Reports shall contain the project identification name and number, date of concrete placement, name of contractor, name of concrete supplier and truck number, name of concrete testing service, concrete type and class, location of concrete in structure, design compressive strength at 28 days, compressive break strength, and type of break.

1.5.1.6 Prior to placing reinforcing steel, the contractor shall submit the following for review by the engineer:

☐1.5.1.6.1 Bar lists for fabrication of reinforcing steel.

☐1.5.1.6.2 Field placing drawings.

☐1.5.1.6.3 Certified mill test reports for each bar size for each heat of reinforcing steel delivered.

1.5.1.2 Delivery

1.5.1.2.1 Concrete

1.5.1.2.1.1 Deliver ready mixed concrete in truck mixer, meeting the requirements of ASTM C94.

1.5.1.2.1.2 Water reducing and air entraining admixtures are to be added at the batch plant, while accelerators and retarders may be added at the batch plant or jobsite. Refer to ACI 304, Section 4.5, for requirements for charging of ingredients into the mixer.

1.5.1.2.1.3 If specified, add high range water reducing admixtures to the concrete at the project site.

1.5.1.2.2 Reinforcing Steel

1.5.1.2.2.1 Reinforcing steel shall be prepared for shipment in such a manner that quality and cleanliness shall be maintained during shipment. Materials shall be adequately protected against damage during shipment.

1.5.1.2.2.2 Shipments shall be by structure to the maximum extent possible.

1.5.1.2.2.3 Store reinforcement above ground and protect from dirt, oil, and grease.

2 PRODUCTS

2.1 MATERIALS

2.1.1 Any product not listed under the following Materials section may be submitted to the engineer for review and approval. A product that is not listed is not to be used without written approval of the engineer.

2.1.2 Products shall meet applicable local VOC regulations.

2.1.3 Concrete

2.1.3.1 Cement: ASTM C150, Type I, or as shown and indicated on drawings; use only one brand for all cement.

2.1.3.2 Fly ash: ASTM C618, Class F.

2.1.3.3 Fine and coarse aggregates: ASTM C33 for normal weight concrete; ASTM C330 for lightweight concrete.

2.1.3.4 Water: Mixing water for concrete shall meet the requirements of ASTM C94.

2.1.4 Admixtures

2.1.4.1 Air entrainment: ASTM C260, liquid air-entraining admixture, equivalent to Micro Air by the Masterbuilders Co., or Air Mix by the Euclid Chemical Co., or approved equal.

2.1.4.2 Water reducing: ASTM C494, Type A, Equivalent to Pozzalith 200N by the Masterbuilders Co., or Eucon WR-75 by the Euclid Chemical Co., or approved equal.

2.1.4.3 Water reducing, retarding: ASTM C494, Type D, equivalent to Pozzalith 122R by the Masterbuilders Co., or Retarder 75 by the Euclid Chemical Co., or approved equal.

2.1.4.4 High range water reducer: ASTM C494, Type F or G, (superplasticizer) equivalent to Rheobuild 100 by the Masterbuilders Co., or Eucon 37 by the Euclid Chemical Co., or approved equal. Note: Superplasticizer shall not be used without the written consent of the Engineer.

2.1.4.5 Noncorrosive, nonchloride accelerator, if so specified: The admixture shall conform to ASTM C494, Type C or E, and not contain more chloride ions than are present in municipal drinking water. The admixture manufacturer must have long term noncorrosive test data of at least a year's duration, from an independent testing laboratory, using an acceptable accelerated corrosion test method such as that using electrical potential measures, equivalent to Pozzutec 20 by Masterbuilders, or Accelguard 80 by the Euclid Chemical Co., or approved equal.

2.1.4.6 Admixtures containing calcium chloride, thiocyanates, or any admixture shall not contribute more than 5 ppm (0.005 percent) by weight, of chloride ions to the total concrete constituents.

2.1.4.7 Admixtures from only 1 supplier are to be used.

2.1.5 Concrete Accessories

2.1.5.1 Bonding compounds: Nonrewettable; the compound shall be a polyvinyl acetate type such as Euco Weld by the Euclid Chemical Company. Obtain Engineer's approval prior to use.

2.1.5.2 Epoxy adhesive: The compound shall be a 2-component, 100 percent solids,

100 percent reactive compound suitable for use on dry or damp surfaces, Euco Epoxy Number 452MV or Number 620 by the Euclid Chemical Company or Sikadure Hi-Mod by the Sika Chemical Company.

2.1.5.3 Repair topping (thicknesses of 1/16" to 1/2"): Latex and microsilica modified cementitious mortar designed for use as a floor or deck topping. Thin top supreme by the Euclid Chemical Company, or approved equal.

2.1.5.4 Repair topping (thicknesses of 1/2" to 2"): Latex and microsilica modified cementitious mortar designed for use as a floor or deck topping. Concrete Top Supreme by the Euclid Chemical Company, or approved equal.

2.1.5.5 Vapor barrier: 6 mil thick clear polyethylene film or fabric reinforced plastic film, type recommended for below grade applications.

2.1.5.6 Synthetic fibers: Monofilament or fibrillated polypropylene fibers for secondary reinforcing of concrete members. Product shall be Fiberstrand by the Euclid Chemical Company or Fibermesh, by Fibermesh, Inc. Product shall have a UL rating.

2.1.5.7 Patching mortar shall be a free-flowing polymer-modified cementitious coating equivalent to Euco Thin Coat by the Euclid Chemical Company.

2.1.6 Curing Compounds and Accessories

2.1.6.1 Liquid membrane curing compounds conforming to ASTM C309, Type I, ID, Class A and B shall be water clear, styrene acrylate type, minimum solids content 30 percent; maximum moisture loss as determined by independent testing laboratory tests shall not exceed 0.025 grams per square centimeter when applied at a coverage rate of 300 square feet per gallon. The curing and sealing compound shall be certified to comply with this specification and Federal Specification TT-C800A, Type I. Application rate shall not exceed that as stated by the manufacturer which shall meet the above moisture retention requirements. Products shall be equal to Super Diamond Clear VOX or Super Aqua-Cure VOX by the Euclid Chemical Co., Master Kure by the Masterbuilders Co., Dress and Seal 30 or Dress and Seal 30 WB by L & M Construction Chemicals, Inc., or Engineer approved equal. These products also seal and dustproof.

2.1.6.2 Liquid chemical curing compounds conforming to ASTM C309, Type I, ID, Class A and B, shall be Master Kure or Master Kure W by Masterbuilders, Inc., Kurez DR by the Euclid Chemical Co., L & M Cure by L & M Construction Chemicals, Inc., or Engineer approved equal and have a minimum solids content of 17 percent.

2.1.6.3 In states or areas that require VOC (Volatile Organic Compounds) compliance for curing compounds, the contractor shall select a product and submit for the engineer's approval; especially in enclosed areas of existing operating plants and in the state of California.

2.1.6.4 Polyethylene film: ASTM C171, 4 mil thick, clear, white opaque color, or black.

2.1.6.5 Absorptive mats: ASTM C171, cotton fabric or burlap-polyethylene, minimum

8 ounce per square yard, bonded to prevent separation during handling and placing.

2.1.7 Products for Joints in Concrete

2.1.7.1 Joint Primer: A 2-component penetrating liquid resinous primer, for use with urethane and epoxy sealants such as U-Seal Joint Sealant 3203 Primer by Burke.

2.1.7.2 Backup Material: ASTM D1056, round closed cell foam rod; oversized 30 to 50 percent larger than joint width.

2.1.7.3 Waterstop: Waterstops shall be dumbbell or centerbulb type and shall be made from extruded PVC (polyvinyl chloride) with a minimum width of 6 inches, unless noted otherwise.

2.1.7.4 Joint Filler

2.1.7.4.1 ASTM D994, bituminous impregnated fiberboard, 1/2 of an inch and 1 inch thick.

2.1.7.4.2 ASTM D1751; asphalt impregnated cork, with asphalt saturated glass-fiber felt liners; 1/2 of an inch thick.

2.1.7.5 Joint Sealant

2.1.7.5.1 Joint sealants shall conform to the provisions of ACI 504R.

2.1.7.5.2 Expansion and isolation joints: Self-Leveling, 2-component polyurethane sealant such as U-Seal Joint Sealant 3202 Hand-Mix, Non-Sag by Burke.

2.1.7.5.3 Control and construction joints: Corrosion resistant, 2-component resin hardener for joints cut with Soff-Cut saws such as Edge Pro 50 by Metzger McGuire Co., or Euco 700 by the Euclid Chemical Company.

2.1.8 Reinforcing Steel

2.1.8.1 Fabrication

2.1.8.1.1 Reinforcing bars: ASTM A615, deformed billet-steel bars, plain finish.

2.1.8.1.2 Reinforcing bar mat: ASTM A184, deformed billet-steel bars, plain finish.

2.1.8.1.3 Spiral reinforcing: ASTM A82, cold-drawn plain steel wire, plain finish; for spiral reinforcing in columns, cast-in-place piles, drilled piers, and caissons.

2.1.8.1.4 Welded wire fabric: ASTM A185, cold-drawn plain steel; ASTM A497, cold-worked deformed steel; in flat sheets, plain finish.

2.1.8.1.5 Coatings: ASTM A767 for galvanized coating or ASTM A775 for epoxy coating.

2.1.8.1.6 Material shall be new and in accordance with the ASTM specification or other

recognized standards specified. Materials not manufactured in the United States shall be submitted for approval. The owner reserves the right to reject the use of such materials.

2.1.8.1.7 Bar bends and fabrication tolerances shall be in accordance with ACI 315.

2.1.8.1.8 Reinforcing steel shall be bent cold. Rebending of hooks shall not be permitted. Bars may be straightened provided the bend is more than or equal to 2 times the recommended minimum diameter of bends.

2.1.8.1.9 Bar supports shall be according to Chapter 5 of ACI 301.

2.1.8.1.10 Tie wire shall be black annealed wire, 16 gage minimum.

2.1.8.2 Placing Drawings and Bending Schedules

2.1.8.2.1 Placing drawings and bending schedules showing the number, grade, size, length, mark, location, and bending diagrams for reinforcing steel shall be prepared in accordance with ACI 315.

2.1.8.2.2 Lap splices shall be as indicated on the design drawings.

2.1.8.2.3 Each structure or foundation shall have a different identity number. Drawings shall indicate the related PO number and drawing number.

2.1.8.3 Identification and Tagging

2.1.8.3.1 Tag reinforcing in accordance with this specification; use embossed metal tags.

2.1.8.3.2 Tag each bundle of bars, straight or bent, showing drawing number, structure, mark number, bar quantity, and size.

2.1.8.3.3 Tag stock length straight bars showing number of bars, size, and length.

2.1.9 Products for Concrete Formwork

2.1.9.1 Design and installation of formwork, tolerances, preparation of form surfaces, removal of forms, and reshoring is to be in strict accordance with Chapter 4, ACI 301.

2.2 CONCRETE MIXES

2.2.1 Pre-Concrete Conference: Concrete Supplier, Engineer, Concrete Contractor, Admixture Supplier, and Testing Laboratory shall meet before submittal of mix design to review specifications, discuss detailed requirements for preparing mix designs, and to establish proper construction procedures.

2.2.2 Proportioning

2.2.2.1 Proportion normal weight concrete mixes in accordance with Chapter 3 of ACI 301, mass concrete mixes in accordance with Appendix 5 of ACI 211.1, and lightweight concrete mixes in accordance with ACI 211.2 on the basis of either previous field experience or trial mixes; do not proportion concrete mixes based on empirical data. Refer to Appendix A of ACI 301 for flow chart on proportioning normal weight concrete mixes. Mixing and transportation of concrete shall be in accordance with Chapter 4 of ACI 304R-89.

2.2.2.2 Include proposed chemical admixtures in mix design in same proportions and batching sequence as shall be used in production concrete.

2.2.2.3 The proposed mix designs shall be accompanied by complete standard deviation analysis of trial mix data.

2.2.2.4 Determine standard deviation and required average compressive strength in accordance with the requirements of ACI 301.

2.2.2.5 Concrete shall contain a coarse aggregate with a nominal size of 1.5 inches unless a smaller nominal size is permitted by the design documents. Refer to ACI 301, Section 3.6 for additional requirements.

2.2.2.6 Give particular attention to aggregate gradation for pumpable concrete mixes.

2.2.3 Concrete shall be air entrained according to Table 3.4.1 of ACI 301. Interior floor slabs preferably shall have no air entrainment, but no more than 3 percent.

2.2.4 Fly ash may be used as a cementitious material, with the fly ash replacing a maximum of 20 percent of the cement (by weight). The fly ash shall be used in calculating the water-cement ratio and shall come from the same source.

3 EXECUTION

3.1 PREPARATION

3.1.1 Anchor Bolts and Embedments

3.1.1.1 Steel, ironwork, pipe sleeves, inserts, wood blocking, nailer strips, isolation joint material, construction joint dowels, and other fixtures as shown, specified, or required to be built into concrete shall be placed accurately and secured against displacement during concreting. Sufficient time between erection of forms and placing concrete shall be given to the various trades to permit proper installation of their work. The installation of anchors, inserts, and sleeves for electrical, mechanical, plumbing, heating, and ventilation work shall be subject to the inspection and approval of the supervisor of the particular trade or trades involved before concrete is placed.

3.1.1.2 The installation of and tolerances for anchor bolts and embedded items shall comply with Paragraph 7.5 of the AISC Code of Standard Practice. Anchor bolts shall be located within 1/8 of an inch of design position.

3.1.1.3 Locate plate inserts within plus or minus 1/4 of an inch horizontally or vertically.

3.1.1.4 Protect bolt threads against damage and concrete; cap or plug sleeves to keep out water, concrete, and debris.

3.1.1.5 Tack welding of anchor bolts, reinforcing steel, and embedments is not permitted unless noted on drawings.

3.1.2 Placing Concrete

3.1.2.1 Preparation before placement and conveying of concrete shall be in accordance with Chapter 8, Section 8.1 and 8.2 respectively of ACI 301.

3.2 INSTALLTION

3.2.1 Concrete Production

3.2.1.1 Production of concrete shall comply with Chapter 7 of ACI 301. Water may be added to the mix at the point of delivery in accordance with Section 11.7 of ASTM C94 when permitted by the owner's testing agent but in no case shall the total amount of water added at the jobsite batch plant exceed the quantity specified for the design mix.

3.2.2 Placing

3.2.2.1 Placement of concrete shall be in accordance with Chapter 8 of ACI 301. The temperature of plastic concrete, as placed, shall not exceed 90 degrees F. During cold weather, as placed, temperature shall not be less than 50 degrees F. Hot and cold weather concreting shall be in accordance with ACI 305 and ACI 306.

3.2.2.2 Color top surface of underground duct envelopes; sprinkle colored iron oxide powder over

3.2.2.2.1 Red for underground electrical ducts.

3.2.2.2.2 Yellow for underground instrument air line ducts.

3.2.2.3 Ensure that discharge of ready mixed concrete is completed within 1.5 hours after batching. The 1.5 hours may be extended if the concrete is of such slump after 1.5 hours (or 300 revolutions) that it can be satisfactorily placed and consolidated without the addition of water.

3.2.2.4 Maintain records of concrete placement; record date, location, quantity, air temperature, field test results, and test samples taken; maintain concrete delivery tickets with record for ready mixed concrete.

3.2.2.5 Redosage: Redosage with the specified high range water reducing admixture (super plasticizer) may be done with the prior approval of the engineer regarding dosage and time periods.

3.2.2.6 Obtain replacement inspection and authorization from the construction manager before placing concrete.

3.2.2.7 Concrete conveying by pumping shall meet the requirements of ACI 304R, Chapter 9. Concrete conveying by belt conveyor shall meet requirements of ACI 304R, Chapter 10.

3.2.2.8 After concrete placement and form removal, clean exposed reinforcing steel and embedded items of concrete splatter, dirt, and other foreign matter.

3.2.2.9 Concrete that has achieved initial set or has been contaminated by foreign matter shall not be deposited in the structure. Retempered concrete shall not be used.

3.2.3 Slabs on Grade

3.2.3.1 Construct slabs in accordance with Chapter 11 of ACI 301.

3.2.3.2 Place concrete in alternating strips.

3.2.3.3 When separate floor toppings are called for, place the floor toppings to required lines and grade after the concrete has cured. Screed toppings level or sloped on the drawings.

3.2.3.4 Floor slab tolerance shall conform to Chapter 7, Section 7.15 of ACI 302.1R (unless otherwise noted on the design drawings).

3.2.3.4.1 When ACI 302.1R is used, the Composite F-numbers for flatness and levelness shall be no less than the following for troweled surfaces:

- F(f) - 20
- F(l) - 15 and for elevated slabs

3.2.3.4.2 Local F-numbers shall be no less than the following:

- F(f) - 15
- F(l) - 10

3.2.3.5 If a vapor barrier is called for on the drawings, and if sharp backfill may puncture the barrier, place a sand layer 3 inches thick as a cushion. Lap vapor barrier 6 inches at joints and seal with duct tape. Carefully fit vapor barrier around service openings.

3.2.4 Slab Finishes

3.2.4.1 Concrete slab surfaces shall be finished in accordance with ACI 302.1R.

3.2.4.2 Finish interior concrete floor slabs in accordance with ACI 302.1R for Class 5 (industrial) floors unless otherwise shown on the drawings.

3.2.4.3 Provide a "floated finish" at equipment bases and exterior slabs according to ACI 301, Section 11.7.2. Provide a "broom finish" to equipment bases, exterior slabs, stairs, steps, ramps, and walks.

3.2.4.4 If no finish is specified, refer to ACI 301, Section 11.8.

3.2.5 Finishing Formed Surfaces

3.2.5.1 Formed concrete surfaces shall be finished in accordance with Chapter 10 of ACI 301, unless otherwise noted on the design drawings.

3.2.6 Formwork

3.2.6.1 The design, installation, and removal of formwork shall be in accordance with ACI 347 except as modified herein. Wall and soil supported member forms may be removed after 48 hours provided the concrete is sufficiently hard not to be damaged by form removal, and provided curing operations start immediately. Self-supporting member forms may be removed after 7 days provided the concrete strength is 80 percent of the 28-day strength. No superimposed load shall be applied before the 28-day strength has been verified by field cured cylinders. Formwork tolerances shall meet ACI 301 Table 4.3.1.

3.2.6.2 Unless otherwise shown on the concrete drawings, exposed edges shall have a 1-inch chamfer. Unexposed corners may be either square or chamfered.

3.2.6.3 Obtain approval before framing openings in structural members if openings are not indicated on the drawings.

3.2.6.4 Do not apply form release agent wherever concrete surfaces shall receive special finishes or wherever applied coverings are affected by agent; soak inside surfaces of untreated forms with clean water; keep surfaces coated before placing concrete.

3.2.6.5 Coordinate work of other specifications in forming and placing openings, slots, reglets, recesses, chases, sleeves, bolts, anchors, and other inserts.

3.2.7 Reinforcement

3.2.7.1 The grade, type, and details of reinforcing steel shall be in accordance with the design drawings. Placement of reinforcement shall be in accordance with Section 5.7 of ACI 301 unless otherwise approved by the engineer.

3.2.7.2 Place, support, and fasten reinforcing before placing concrete; do not insert dowels into fresh concrete; do not float welded wire fabric down into fresh concrete. Support slab reinforcement at the required depth and secure prior to placing concrete; do not pull welded wire fabric up into fresh concrete as it is placed.

3.2.7.3 Secure at least 25 percent of bar intersections (including wall dowels) with wire in 2-way mats.

3.2.7.4 Splice reinforcing bars only as shown on the design drawings. Necessary splices not shown on the drawings shall be lapped sufficiently, as approved by the engineer, to develop the strength of the bars by bond for bars through size Number 11. Mechanical splices shall be made only as shown and noted on the drawings. Welded splices are not allowed.

3.2.7.5 Minimum concrete cover shall be according to ACI 301, Section 5.7. Areas subject to chemical exposure, as noted on the design drawings, shall have a minimum cover of 2 inches, unless otherwise noted.

3.2.8 Joints and Embedded Items

3.2.8.1 Joints and embedments shall be in accordance with Chapter 6 of ACI 301 unless otherwise approved by the engineer.

3.2.8.2 Construction joints shall be located as shown on the concrete drawings. Any variation from location shown shall be approved by the engineer. Should the concrete operation require the placement of an intermediate construction joint, the concrete shall be struck off square with the structure, water stops added if the normal joint has a waterstop, the location completely recorded and reported to the engineer in writing. Adjacent pour shall not be made until a disposition has been received from the engineer.

3.2.8.3 Construction, isolation, and control joints in slabs on grade are to be built in accordance with and located according to the design drawings. Control joints in slab toppings are to be located directly above and in line with the control joints in the underlying concrete slab. Saw cut joints are to begin as soon as the concrete is hard enough to prevent raveling of the surface and dislodging of the aggregate, but no later than 12 hours after concrete placement. Prime and seal joints according to Sealant Manufacturer's instructions. Control joints are to be cut using a Soff-Cut Saw and in strict accordance with the saw manufacturer's written recommendations. Determine the sawing sequence based upon slab pour time and size.

3.2.8.4 The surface of construction joints shall be thoroughly cleaned and defective or contaminated concrete, surface film, and laitance removed. Prewet the remaining concrete followed by a brush application of a neat cement paste. Obtain Engineer's approval before using bonding agents. Coating of vertical construction joints is not required.

3.2.8.5 Locate construction joints in girders, beams, and framed slabs according to the design drawings. Obtain approval from the engineer before placing any construction joints in locations other than that shown on the design drawings.

3.2.8.6 Locate construction joints in walls no more than 100 linear feet apart. Install weakened plane control joints at 25-foot maximum spacing between construction joints.

3.2.8.7 Provide and install waterstops in joints as detailed on drawings. Join waterstop

sections according to the manufacturer's recommendations. Anchor securely to prevent movement during concrete placement. Provide at all joints subject to either groundwater or process fluids.

3.2.8.8 Continue reinforcing through construction joints.

3.2.8.9 Isolation joints in walls are to be provided as detailed on the drawings. Interrupt reinforcing at isolation joints; provide and install dowels as detailed on the drawings. Install isolation joints as located on the drawings and where paving adjoins vertical surfaces such as walls, columns, catch basins, manholes, and equipment foundations. Gap width shall be 3/4 of an inch unless otherwise detailed.

3.2.8.10 Control or construction joints not specified on the design drawings shall be located at the column centerlines and at intermediate intervals so that each panel does not exceed 600 square feet in area. Concrete shall be placed in alternate paving lanes utilizing construction and control joints as specified.

3.2.9 Repair of Surface Defects

3.2.9.1 Unless otherwise specified or permitted by the Engineer, tie holes, honeycombs, and other concrete surface defects shall be repaired in accordance with Chapter 9 of ACI 301 and alternate methods in 9.2.2 ACI 301, as soon as practicable after form removal at such times and in such manner as shall not delay, interfere with, or impair the proper curing of the fresh concrete. The engineer shall be notified before proceeding with repair if the defect is greater than 5 inches deep and larger than 200 square inches in surface area, or if the depth is over 1/3 the thickness of the member and greater than 6 inches in any other direction.

3.2.9.2 Prepackaged grouts and patching compounds may be used after Engineering approval is obtained. As an alternate, a patching mortar similar to the concrete mix minus the coarse aggregate can be used. Do not use more than 1 part cement to 2-1/2 parts sand by damp, loose volume. Match the color of the surrounding area.

3.2.9.3 Remediation of Out-Of-Tolerance Slabs

3.2.9.3.1 Grind down high points.

3.2.9.3.2 Raise low points by using the specified underlayment compound or repair topping if the areas are exposed.

3.2.9.3.3 Critical slab areas that must be replaced if out-of-tolerance are identified on drawings.

3.2.9.3.3.1 Demolish and replace out-of-tolerance areas that are identified on drawings.

3.2.9.3.3.2 Submit demolition and replacement plan to the engineer for review and concurrence before demolition.

3.2.9.3.3.3 Replacement slab shall meet tolerance requirements as shown on drawings for critical slab areas.

3.2.10 Curing and Protection

3.2.10.1 Freshly deposited concrete shall be protected from premature drying and excessively hot or cold temperatures and shall be maintained with minimal moisture loss at a relatively constant temperature for the period of time necessary for the hydration of the cement and proper hardening of the concrete. Curing shall conform to the requirements in Chapter 12, ACI 301.

3.2.10.2 Follow the manufacturer's recommendations for curing and sealing when hardeners, metallic, or mineral aggregate toppings are specified on the design drawings.

3.2.10.3 Concrete Surfaces in Contact with Forms

3.2.10.3.1 The time during which concrete surfaces are in contact with wood or metal forms may be considered as curing time. Wood forms shall be maintained in a moist condition until removal. After form removal, the concrete shall be cured until the end of the curing period by one of the methods of concrete surfaces not in contact with forms. Moist wood forms in contact with concrete shall not be considered as curing for hydraulic structures. Curing time shall commence as soon as the wall forms have been loosened and sprinkling has begun. Wall forms shall be loosened between 24 and 48 hours after concrete placement and sprinkling begins. Wood forms shall be kept moist until the forms are loosened and the curing procedure begins.

3.2.10.4 Sealing and Dustproofing

3.2.10.4.1 Exposed concrete floor surfaces shall be sealed and dustproofed. Where the concrete is cured by using a liquid membrane curing compound, this sealing and dustproofing can be a part of the curing process by applying a second coat of the curving compound, provided a suitable compound is used. Where some other curing method is used, the concrete surface shall be coated with a liquid sealing and dustproofing compound. Apply compounds in accordance with the manufacturer's instructions.

3.2.10.4.2 Liquid membrane curing compounds that also seal and dustproof may be used on exposed concrete floors. Do not use membrane forming compounds on surfaces to receive bonded treatments, tiles, adhered finishes, paint, epoxy toppings, tiles, and additional concrete.

3.2.10.5 Concrete Surfaces Not in Contact with Forms

3.2.10.5.1 Concrete surfaces not in contact with forms can utilize any of the methods indicated in ACI 301, Section 12.2.1 for preservation of moisture, except do not use ponding, sprayed water, or wet sand on exposed concrete slabs.

3.3 FIELD QUALITY CONTROL

3.3.1 To ensure that ingredient materials meet the specification requirements, the following preconstruction qualification tests shall be performed on the materials proposed for use. The contractor shall be responsible for compiling this documentation and for having

these tests performed by a testing laboratory acceptable to the engineer. Tests on cement and admixtures may be performed by the supplier of the particular material.

3.3.1.1 Cement

Physical and chemical properties from tests referenced in ASTM C150 or C595 as appropriate.

3.3.1.2 Aggregate

Required Test	Sand	Stone
Gradation	ASTM C136	ASTM C136
Fineness modulus	ASTM C136	- - -
Material finer than Number 200 sieve	ASTM C117	ASTM C117
Organic impurities	ASTM C40	- - -
Lightweight pieces	ASTM C123	ASTM C123
Friable particles	ASTM C142	ASTM C142
Specific gravity & absorption	ASTM C128	ASTM C127
Los Angeles abrasion	- - -	ASTM C131
Potential reactivity (chemical method)	ASTM C289	ASTM C289
Potential reactivity (mortar-bar method)	ASTM C227	ASTM C227
Soundness	ASTM C88	ASTM C88
Petrographic examination	ASTM C295	ASTM C295

3.3.1.3 Mixing Water and Ice

Nonpotable water, if used, shall be tested to determine if it produces mortar cubes having 7 and 28-day strengths equal to at least 90 percent of the strength of similar specimens made with distilled water. The strength comparison shall be made on mortars, identical except for the mixing water, prepared and tested in accordance with ASTM C109. The chloride content shall be determined in accordance with ASTM D512.

3.3.1.4 Water Reducing, Retarding, Accelerating and Air Entraining Admixture

Manufacturer's certification that the admixture complies with ASTM C494 and ASTM C1017, Standard Specification for Chemical Admixtures for use in Producing Flowable Concrete.

3.3.1.5 Pozzolanic Admixtures

3.3.1.5.1 The tests for physical and chemical properties referenced in ASTM C618 shall be performed.

3.3.2 Concrete materials and operations shall be tested and inspected as the work progresses in accordance with Chapter 16 of ACI 301. Failure to detect any defective work or material shall not in any way prevent later rejection when such defect is discovered nor shall it obligate the architect/engineer for final acceptance.

3.3.3 Testing shall include compressive tests of molded concrete cylinders, tests for slump, unit weight, air content (where air entrainment is required), fresh concrete temperature, and unit weight according to ASTM C138.

3.3.4 The rate of sampling shall be in accordance with ACI 301, Section 16.3. Take additional samples when observations on tests indicate nonconformance with the specifications.

3.3.5 Testing of Reinforcing Steel

3.3.5.1 Reinforcing steel shall be tested in accordance with ASTM A615.

3.3.5.2 Reinforcing steel with rust, mill scale, or a combination of both shall be considered satisfactory provided the minimum dimensions, including height of deformations and weight of hard-wire-brushed test specimen, are not less than ASTM A615 requirements. Such test shall be at the engineer's discretion.

3.3.5.3 Reinforcing steel shall be free from mud, oil, or other nonmetallic coatings that adversely affect bonding capacity.

3.4 Field Quality Control

3.4.1 The construction manager shall establish procedures for inspection, testing, acceptance criteria, and documentation. These procedures shall define the documentation that shall be employed to ensure that the certifications, examinations, tests, and approvals required by the contract specifications are accomplished. Inspection procedure shall provide for documented preplacement inspections. Testing and acceptance of materials and concrete work shall comply with Chapters 16, 17, and 18 of ACI 301 unless otherwise modified herein.

3.4.2 The contractor's responsibilities and duties in relation to the owner's testing agent shall be as specified in Section 16.7 of ACI 301.

3.4.3 The owner's testing agent shall have duties and authorities as specified in Section 16.6 of ACI 301.

3.4.4 Acceptance of concrete shall be based upon results for slump, air content, temperature, and strength taken at the site. Testing frequency shall be as specified in Section 16.3 of ACI 301 unless waived by the engineer.

3.4.5 The finished structure shall be evaluated for acceptability in accordance with Chapter 18 of ACI 301. The contractor shall pay costs incurred for additional testing, analyses, and any corrective work required when the structure is found to be deficient in strength or other specified characteristics.

3.4.6 During construction, the Independent Testing Agency shall inspect, sample, and test concrete materials and production of concrete as required by the engineer. Failure to detect any defective work or material shall not prevent in any way later rejection when

such defect is discovered, nor shall it obligate the engineer for final acceptance. The testing and inspection agency shall meet the requirements of ASTM E329.

4 PAYMENT

4.1 Payment for work in this section shall be included in the lump sum or unit price for the work to which it is.

* * END OF SECTION 03300 * *

SECTION 06135

TREATED TIMBER POLE BARN

1 GENERAL

1.1 SUMMARY

1.1.1 This section includes the work necessary for providing all equipment, materials, labor and incidentals to construct a treated timber, open-air pole barn in accordance with the Project Drawings and these specifications.

1.1.2 Related Sections

1.1.2.1 Section 01300 – Submittals During Construction

1.2 REFERENCES:

1.2.1 The publications listed below form part of this specification. Each publication shall be the latest revision and addendum in effect on the date this specification is issued for construction unless noted otherwise. Except as modified by the requirements specified herein or the details of the drawings, Work included in this specification shall conform to the applicable provisions of these publications.

1.2.2 AASHTO M-168 – Structural Timber, Lumber and Piling

1.2.3 AWPA M4 – Care of Preservative Treated Wood Products

1.2.4 AWPA U1 – Commodity Specifications

1.2.5 NIST-P20 – American Softwood Lumber Standards

1.3 DEFINITIONS

1.3.1 AASHTO – American Association of State Highway and Transportation Officials

1.3.2 ACQ – Alkaline Copper Quaternary

1.3.3 AWPA – American Wood-Preservers Association

1.3.4 CCA – Chromated Copper Arsenate

1.3.5 MCA – Micronized Copper Azole

1.3.6 MCQ – Micronized Copper Quaternary

1.3.7 NIST – National Institute of Standards and Technology

1.4 SUBMITTALS

The following shall be submitted in accordance with Section 01300, in sufficient detail to show full compliance with the specification

1.4.1 The Contractor shall submit engineered drawings for the proposed pole barn including foundation details that demonstrate the overall design complies with current building codes. The drawings shall indicate the locations and sizes of members used for corner, lateral and sway bracing.

1.4.2 Grade Boards, if required, shall be a minimum size of 2"x8" pressure treated timber. Uplift cleats, if required, shall be constructed of pressure treated timber.

1.4.3 The design and minimum building and material requirements as presented in the drawings are based on information provided by APB Pole Barns of San Antonio. Texas, or approved equal.

1.4.4 The Contractor shall provide a written certification that all timber and lumber has been treated in accordance with these specifications.

1.5 DELIVERY, STORAGE AND HANDLING

1.5.1 Storage, handling and field fabrication, including treating of cut ends, shall be in accordance with AWPA M4.

1.5.2 Any lumber or timber furnished by the Contractor which is cracked or broken because of internal defects shall be removed and replaced at no additional expense to the Owner.

1.5.3 Treated timber and lumber shall be carefully handled with no sudden dropping, breaking of outer fibers, bruising, or penetrating the surface with tools.

1.5.4 Peavey, cant hooks, pikes, hooks, or other pointed tools shall not be used in handling treated timber and lumber.

2 PRODUCT

2.1 MATERIALS

2.1.1 Timber and Lumber

2.1.1.1 Shall be Southern Pine, medium grained or better, cut from straight, sound, live trees; shall be well manufactured and shall conform in all respects to applicable requirements of AASHTO M-168.

2.1.1.2 Grade and surface finish (NIST P-20) shall be as follows: All materials shall be Southern Yellow Pine, Structural Grade Number 1, with an S4S finish.

2.1.1.3 Fasteners shall be hot-dipped galvanized ring-shank nails, unless otherwise specified. Fasteners for steel roof panels shall be zinc-coated steel, aluminum, corrosion resisting steel, or nylon-capped steel, type and size specified below, or as otherwise, approved for

the applicable requirements. Fasteners for aluminum roof panels shall be aluminum or corrosion resisting steel. Fasteners for structural connections shall provide both tensile and shear ultimate strengths of not less than 750 pounds per fastener. Fasteners for accessories shall be the manufacturer's standard. Exposed roof fasteners shall be sealed or have sealed washers on the exterior side of the covering to waterproof the fastener penetration. Washer material shall be compatible with the screw head; have a minimum diameter of 3/8-inch for structural connections; and gasket portion of fasteners or washers shall be neoprene or other equally durable elastomeric material.

2.1.2 Preservative Treatment

2.1.2.1 All wood shall be given a preservative treatment prior to delivery.

2.1.2.2 Preservative system and retentions for all wood shall be in accordance with AWPA U1 classification shown in Table 1.

TABLE 1
TREATED WOOD USE VERSUS AWPA U1 CLASSIFICATION

Construction Use	AWPA U1 Classification
1. General ground contact or exposure to fresh water, structural or difficult replacement component	UC4C

2.1.2.3 Preservative treatment shall be as follows.

- CCA for wood that will not be in general contact with the public – columns, truss material, cross bracing, etc.

2.1.2.4 All cut or damaged surfaces, including saw cut surfaces and drilled holes, shall be treated with a preservative before being installed.

2.1.2.4.1 Field treatment preservative shall be a copper naphthenate solution with a minimum of 2 percent copper metal (Cop-R-Tox, Formula 202, manufactured by Mobile Paint Manufacturing Company Incorporated or equal).

2.1.3 Fasteners

2.1.3.1 Type and size of fasteners are shown on the Project Drawings.

2.1.3.1 Fasteners (wood screws, nails, bolts including washers and nuts) that are in contact with ACQ treated wood must be stainless steel or any other material that will provide the necessary connection strength but not be corroded by the ACQ treatment (galvanized steel or aluminum are not acceptable).

2.1.3.2 Fasteners (wood screws, nails, bolts including washers and nuts) that are in contact with MCQ or CCA treated wood can be hot dipped galvanized.

2.1.3.3 All bolts must be machine bolts and provided with two washers and one hex nut.

2.1.4 Manufactured Roof Panels

2.1.4.1 The panel material shall be 26-gauge galvalume (G90 coating), per ASTM specification A525 (G90).

2.1.4.2 All panel ends and edges shall be coated to protect against rusting. When field cutting is required, the exposed metal shall immediately receive a protective coating of the coating manufacturer's field touch up system.

2.1.4.3 Where drilling, sawing, or cutting of panels is required, all shavings, etc., will be cleaned from the panel surface immediately. If shavings, etc., are allowed to rust and stain the finish surface beyond cleaning, the contractor shall replace the entire panel with a new panel at no additional expense to the owner.

2.1.4.4 Any panel damaged during erection, handling, etc., shall be culled out and replaced with a new panel. Panels with minor surface scratches or abrasions that do not expose the metal substrate will be touched up using the coating manufacturer's field touch up system. Scratches, gouges, or abrasions that expose the metal substrate shall be replaced with new at no additional cost to the owner.

3 EXECUTION

3.1 POLE BARN

3.1.1 Construction of the pole barn(s) shall be as shown on the Project Drawings, and/or as recommended and approved by the Engineer of Record providing the stamped drawings

3.1.2 Wood shall be accurately cut and tightly jointed.

3.1.3 Washers shall be used under nuts and bolt heads.

3.1.4 Hex nuts on all bolts to be tightened in a two-step process.

3.1.4.1 Initially tighten until snug.

3.1.4.2 A minimum of three weeks after initial nut tighten, re-tighten again to snug.

3.2 3 ROOFING SYSTEM

3.2.3.1 Install the roofing system accordance with manufacturer's instructions and approved installation drawings.

3.2.3.2 Install the roofing system so that it is weathertight and allows for thermal movements.

A. Locate and space all exposed fasteners in accordance with the Manufacturer's

recommendations. Use torque settings to obtain controlled uniform compression for a positive seal without rupturing the neoprene washer.

B. Avoid placing pipe penetrations through the panel seams.

C. Do not allow panels or trim to come into contact with dissimilar materials (i.e. copper, lead, graphite, treated lumber, mortar, etc.). Water run-off from these materials is also prohibited.

D. Comply with Manufacturer's approved installation drawings, instructions and recommendations for installation of roof curbs. Refer to SSSRS Manufacturer's standard installation details. Anchor curbs securely in place with provisions for thermal and structural movement.

4 PAYMENT

4.1 Payment for work in this section shall be included in the lump sum or unit price to which it is subsidiary. Bid price shall include all costs of labor, materials and incidental complete. Payment for the pole barn shall include the installation of the concrete pole foundation.

4.2 Payment shall be made under:

Base Bid - Bid Schedule No. 1
Provide and Construct one (1) Treated Timber Pole Barn Lump Sum
(Base Bid 30'Wx80'L – FEMA Eligible)

Provide and Construct one Treated Timber Pole Barn Lump Sum
(Bid Schedule No. 2- 30'Wx140'L – Non-FEMA Participating)

* * END OF SECTION 06135 * *

CONTRACT DOCUMENTS
FOR CONSTRUCTION OF THE

PUBLIC WORKS FACILITY
POLE BARN REPLACEMENT(S) PROJECT

FOR THE CITY OF

WAVELAND

WAVELAND, MISSISSIPPI

VOLUME II

CITY OF WAVELAND

MAYOR
MIKE SMITH

ALDER MEMBERS
WARD 1: JEREMY BURKE
WARD 2: BOBBY RICHARDSON
WARD 3: SHANE LAFONTAINE
WARD 4: CHARLES PIAZZA

ATTORNEY:
MALCOLM JONES

CITY CLERK:
TAMMY FAYARD

ROBERT A. ESCHER
LICENSED PROFESSIONAL
ENGINEER
14782
STATE OF MISSISSIPPI

COMPTON ENGINEERING, Inc.
Engineering, Surveying, and Environmental Services
3036 LONGFELLOW DRIVE
Bay St. Louis, Mississippi 39521
Phone: (228) 467-2770 Fax: (228) 467-2720
E-mail: compton@comptonengineering.com

REV 0
ISSUED FOR CONSTRUCTION
221-019-006

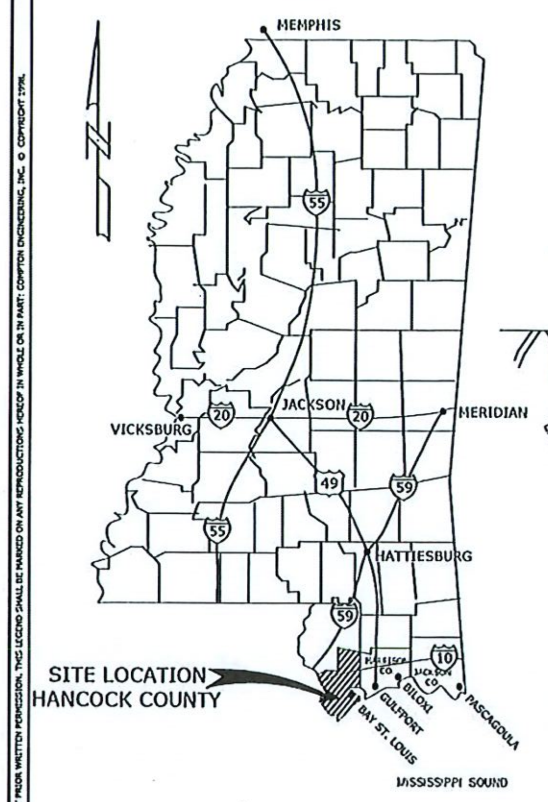

STATE OF MISSISSIPPI
NTS

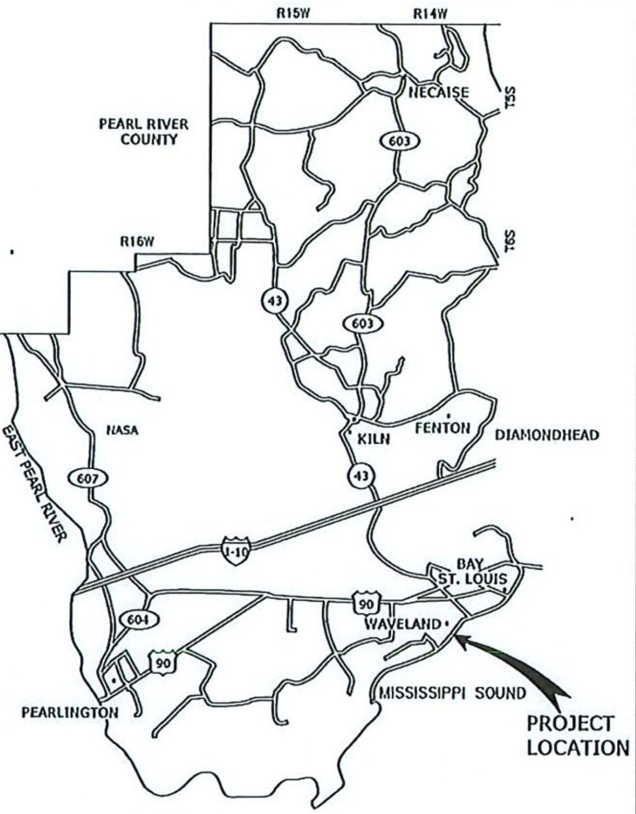

HANCOCK COUNTY
NTS

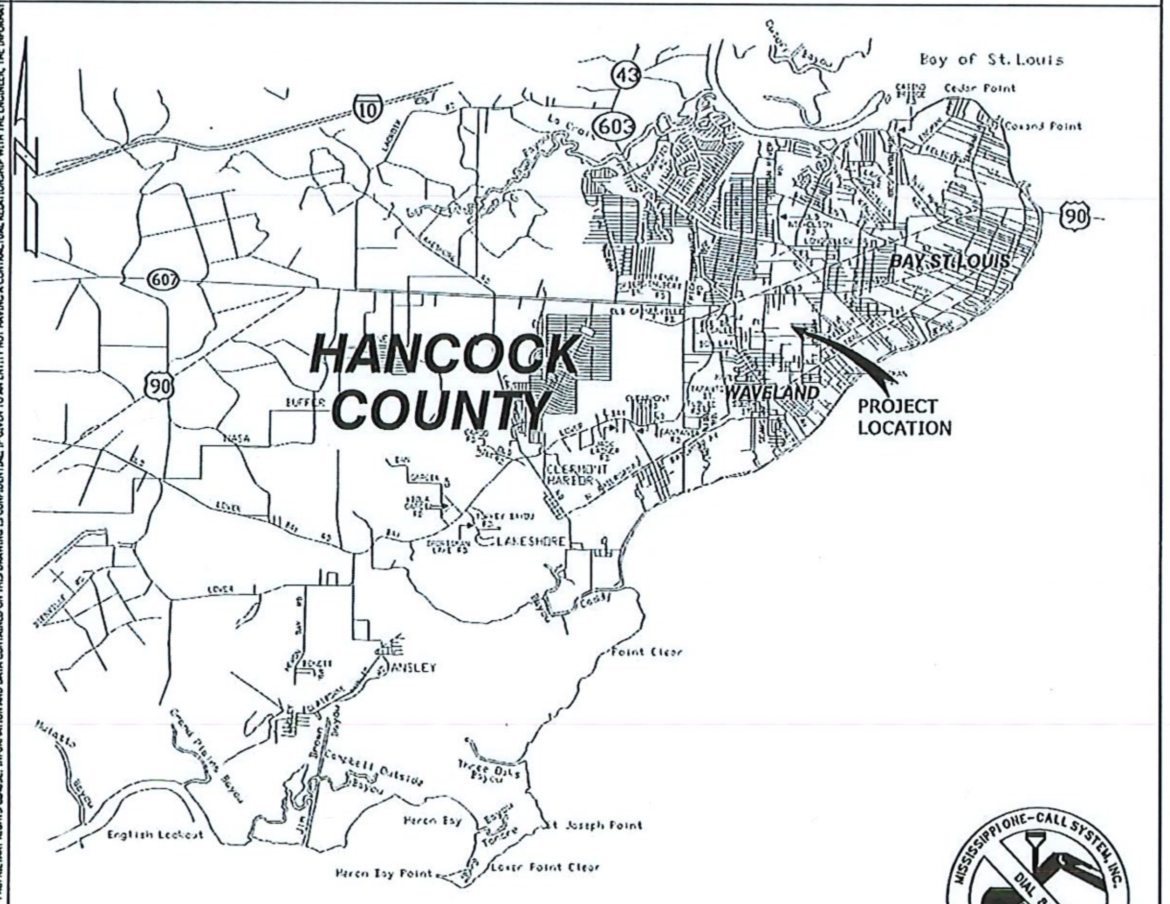

SITE LOCATION MAP
NTS

GENERAL NOTE(S):

1. IT IS THE INTENT OF THE CONTRACT DOCUMENTS TO PROVIDE FOR COMPLETE AND FINISHED WORK. ALL MISCELLANEOUS COMPONENTS, PARTS, ANCHORS, AND OTHER INCIDENTAL ITEMS REQUIRED FOR COMPLETE ASSEMBLY, FUNCTIONING AND OPERATION OF AN ITEM OR SYSTEM SHALL BE PROVIDED, WHETHER OR NOT SPECIFICALLY CALLED FOR.
2. THE DRAWINGS AND SPECIFICATIONS ARE INTENDED TO DEFINE THE GENERAL DESIGN AND SCOPE OF THE WORK REQUIRED TO COMPLETE THE WORK. THE CONTRACTOR SHALL INCLUDE ALL COMPONENTS WHICH ARE NORMALLY INCIDENTAL TO THE WORK. THOSE COMPONENTS WHICH ARE NOT SHOWN ON THE DRAWING OR SPECIFIED BUT WHICH ARE REQUIRED AS AN ESSENTIAL AESTHETIC, FUNCTIONAL OR CODE REQUIRED ELEMENT OF THE WORK ARE TO BE INCLUDED.
3. TO ESTABLISH THE COMPLETE SCOPE OF ITS WORK AND TO EFFECT CLOSE COORDINATION WITH THE OTHER TRADES, EACH TRADE SHALL COMPLETELY REVIEW THE PLANS AND SPECIFICATIONS, NOT ONLY FOR ITS RESPECTIVE TRADE, BUT FOR THE WORK OF THE OTHER RELATED TRADES AS WELL. TITLES OF DIVISIONS (AND SECTIONS IN SPECIFICATIONS) IDENTIFYING WORK ARE PROVIDED FOR ORGANIZATIONAL AND REFERENCE PURPOSES AND SHALL NOT BE TAKEN AS AN ABSOLUTE SEPARATION OF THE TRADES OR OF THE UNITS OF MATERIAL AND LABOR.
4. CONTRACTOR SHALL COORDINATE AND OBTAIN ALL NECESSARY PERMITS AND APPROVALS OR GUIDELINES FROM GOVERNING REGULATORY AGENCIES BEFORE PROCEEDING WITH ANY ITEMS OF WORK UNDER OR WITHIN SUCH JURISDICTION(S).
5. CONTRACTOR IS RESPONSIBLE FOR CONTACTING HANCOCK COUNTY TO ENSURE THAT ALL WORK ON OR ADJACENT TO ROAD R.O.W. MEETS COUNTY REQUIREMENTS.
6. EXCEPT AS MODIFIED BY THE CONTRACT DOCUMENTS, ALL WORK SHALL BE IN ACCORDANCE WITH ALL LOCAL COUNTY OR STATE REQUIREMENTS. THE CONTRACTOR SHALL HAVE A COPY OF ALL APPLICABLE STANDARD SPECIFICATIONS AND DRAWINGS AT THE WORK SITE AT ALL TIMES.
7. CONTRACTOR SHALL COMPLY WITH ALL REQUIREMENTS OF OSHA AND STATE REGULATIONS.
8. CONTRACTOR SHALL CONFINE ALL FIELD OFFICE AND STAGING AREA WORK TO THE CITY OF WAVELAND. LIMITS TO BE COORDINATED WITH THE CITY AND ENGINEER. CONTRACTOR SHALL RETURN THIS AREA TO ITS ORIGINAL, OR BETTER, CONDITION PRIOR TO COMPLETING THE PROJECT. SHOULD THIS AREA NOT BE LARGE ENOUGH FOR STORAGE, THE CONTRACTOR MAY MAKE OTHER ARRANGEMENTS AT HIS/HER COST.
9. CONTRACTOR AGREES THAT HE/SHE SHALL ASSUME SOLE AND COMPLETE RESPONSIBILITY FOR ALL JOB SITE CONDITIONS DURING THE COURSE OF CONSTRUCTION OF THE PROJECT INCLUDING THE SAFETY OF ALL PERSONS AND PROPERTY THERE IN. THIS REQUIREMENT SHALL APPLY CONTINUOUSLY, AND NOT BE LIMITED TO NORMAL WORKING HOURS.
10. CONTRACTOR SHALL VERIFY EXISTING CONDITIONS, SERVICES, DIMENSIONS, AND ELEVATIONS OF SITE.
11. LOCATION OF ALL EXISTING UTILITIES, SUBSTRUCTURES, PROPERTY LINES, SUBSURFACE SOIL OR ROCK CONDITIONS ARE BASED ON THE BEST AVAILABLE INFORMATION AND ARE NOT GUARANTEED AS TO ACCURACY, NOR IS IT WARRANTED THAT ALL ITEMS ARE SHOWN. ALL EXISTING UTILITIES ARE SHOWN FOR INFORMATION ONLY AND SHALL BE FIELD VERIFIED BY THE CONTRACTOR. CONTRACTOR SHALL BE RESPONSIBLE FOR FIELD LOCATING ALL EXISTING UTILITIES. EXISTING ITEMS SHOWN IN PROFILE ARE APPROXIMATE ELEVATIONS ONLY. ALL OVERHEAD ELECTRICAL AND TELEPHONE CABLES OTHER UTILITIES AND POLES ARE NOT WARRANTED TO BE SHOWN. CALL BEFORE YOU DIG @ MISSISSIPPI ONE CALL SYSTEMS INC. PH#811.
12. ALL DIMENSIONS AND TIE-INS GOVERNED BY EXISTING CONDITIONS ARE APPROXIMATE AND ARE NOT GUARANTEED TO BE CORRECT. ALL SUCH DIMENSIONS AND CONDITIONS SHALL BE FIELD VERIFIED BY THE GENERAL CONTRACTOR PRIOR TO PROCEEDING WITH ANY WORK. IF CONDITIONS AND DIMENSIONS VARY FROM THOSE SHOWN, THE CONTRACTOR SHALL NOTIFY THE ENGINEER BEFORE PROCEEDING WITH WORK WHERE DIMENSIONS ARE NOT SHOWN. USE EXACT DIMENSIONS. DO NOT SCALE WHERE DIMENSIONS ARE SHOWN WITH +/- INDICATIONS ADJUSTMENTS MAY BE MADE TO SUIT FIELD CONDITIONS.
13. CONTRACTOR SHALL LIMIT HIS/HER ACTIVITY AND OTHER AREAS NOTED TO THE RIGHT-OF-WAY, PROPERTY LIMITS, AND/OR PERMANENT AND TEMPORARY CONSTRUCTION EASEMENTS AND SHALL RESTORE ALL DAMAGED AREAS IN ACCORDANCE WITH SPECIFICATIONS. ALL EXCESS MATERIALS AND SPOIL SHALL BE DISPOSED OF BY THE CONTRACTOR AT AN OFFSITE LOCATION APPROVED BY THE OWNER AT NO ADDITIONAL EXPENSE.
14. CONTRACTOR SHALL PROTECT AND/OR RESTORE ALL EXISTING SURFACE AND SUBSURFACE UTILITIES, BUILDINGS, STRUCTURES AND OTHER FACILITIES ENCOUNTERED DURING CONSTRUCTION WHETHER OR NOT SHOWN ON THE DRAWINGS. THIS INCLUDES, BUT IS NOT LIMITED TO, IRRIGATION CHANNELS, DIVERSIONS, PIPING, CONNECTIONS AND STRUCTURES ENCOUNTERED ON PUBLIC RIGHTS-OF-WAY AND PRIVATE PROPERTY.
15. CONTRACTOR IS RESPONSIBLE TO SATISFY HIMSELF/HERSELF OF THE CURRENT PLANIMETRIC FEATURES. CONTRACTOR SHALL BE RESPONSIBLE FOR ALL THE CURRENT PLANIMETRIC FEATURES. CONTRACTOR SHALL BE RESPONSIBLE FOR ALL CONSTRUCTION STAKING AND UTILITY/STRUCTURES, LOCATING, PROTECTING & RESTORATION.
16. CONTRACTOR IS RESPONSIBLE FOR THE IMPLEMENTATION AND ADEQUACY OF ALL SEDIMENTATION AND EROSION CONTROL MEASURES DURING CONSTRUCTION. ACCEPTABLE MEASURES AND REQUIREMENTS SHALL BE INCLUDED ON SHEET C1.0. IF MEASURES ARE DEEMED INADEQUATE AT ANYTIME, ENGINEER AND/OR OWNER MAY ORDER ADDITIONAL MEASURES AT CONTRACTORS EXPENSE.
17. TEMPORARY FENCING IS NOT SPECIFICALLY CALLED OUT IN THE PLAN DRAWINGS. TEMPORARY FENCING/BARRIER WILL BE REQ'D AS NECESSARY ALONG THE ACTIVE PROJECT WORK SITE TO PROTECT CONSTRUCTION PROGRESS AND THE SAFETY OF PEDESTRIANS/MOTOR VEHICLES. COST OF THE FENCING/BARRIER OR OTHER ITEMS THAT MAY BE REQ'D BY THE ENGINEER WILL BE ABSORBED BY OTHER ITEMS.
18. CONTRACTOR SHALL BE RESPONSIBLE FOR THE REMOVAL AND DISPOSAL OF ALL EXCESS EXCAVATED MATERIAL, SOILS AND DEMOLITION DEBRIS TO AN OFF-SITE LOCATION AT NO ADDITIONAL CHARGE TO THE OWNER. EXCAVATED SOIL USED FOR TRENCH BACKFILLING SHALL BE TEMPORARILY STOCKPILED AND SHALL NOT CONTAIN CONSTRUCTION DEBRIS, ROCK OR OTHER DELETERIOUS SUBSTANCES. CONTAMINATED SOIL SHALL BE PROPERLY DISPOSED BY THE CONTRACTOR AND SHALL BE REMOVED FROM THE SITE.
19. CONTRACTOR SHALL BE RESPONSIBLE FOR ALL STORM WATER, SILT AND EROSION CONTROL DURING ALL PHASES OF CONSTRUCTION AND SHALL BE RESPONSIBLE FOR OBTAINING ALL ASSOCIATED CONSTRUCTION PERMITS.
20. CONTRACTOR SHALL VERIFY PIPE MATERIAL AND TYPE OF JOINT BEFORE CONNECTIONS BETWEEN EXISTING AND PROPOSED PIPES ARE MADE. CONTRACTOR SHALL SUPPORT ALL PIPING AND CONDUITS EXPOSED DURING CONSTRUCTION AND SHALL BE RESPONSIBLE FOR FLOW DIVERSION AND DEWATERING OF EXISTING PIPE LINES BEFORE INSTALLING TIE-INS.
21. ALL PIPELINE TRENCHES IN PUBLIC RIGHT-OF-WAY AND/OR TEMPORARY EASEMENT SHALL BE BACKFILLED BY THE END OF THE WORKDAY OR WHEN LEAVING THE SITE. OPEN TRENCHES ON PRIVATE PROPERTY SHALL BE KEPT TO A MINIMUM. OPEN TRENCHES SHALL BE COVERED WITH STEEL PLATING WHEN NOT IN USE. UPON BACKFILLING, THE CONTRACTOR SHALL BROOM-SWEEP STREETS, USE APPROPRIATE METHODS TO CONTROL DUST AND HOSE DOWN THE PAVEMENT TO KEEP SURFACE CLEAN.
22. CONTRACTOR SHALL PROVIDE THRUST AND RESTRAINTS THROUGH THE USE OF RESTRAINED JOINTS AND RESTRAINED COUPLINGS. THE ACTUAL LENGTH OF THE RESTRAINT TO BE PROVIDED ON EACH SIDE OF THE FITTINGS AS SHOWN IN THE DRAWINGS. THE CONTRACTOR SHALL ALSO REFER TO THE CONTRACT DRAWINGS FOR AREAS WHERE RESTRAINED JOINTS WILL BE NECESSARY. THE LENGTH OF RESTRAINT SHOWN ON THE DRAWINGS IS THE MINIMUM REQUIRED. ALL TEES, ELBOWS AND BENDS SHALL BE PROVIDED WITH RESTRAINED JOINTS. LENGTHS SHOWN ON THE DRAWINGS FOR RESTRAINED JOINTS ARE IN ADDITION TO THE LENGTH OF TEES, ELBOWS AND BENDS.
23. PRIOR TO CONNECTION TO OR RELOCATION OF ANY EXISTING OWNER FACILITIES, NOTIFY THE ENGINEER. ALL CONNECTIONS TO EXISTING FACILITIES SHALL BE DONE AT THE CONVENIENCE OF THE OWNER.
24. THE CONTRACTOR SHALL OBTAIN PERMISSION FROM STATE AND LOCAL AUTHORITIES PRIOR TO ANY DISRUPTION OF NORMAL TRAFFIC FLOW. ALL DISRUPTIONS OF TRAFFIC SHALL BE IN FULL ACCORDANCE WITH THE MANUAL ON UNIFORM TRAFFIC CONTROL DEVICES (MUTCD).
25. THE CONTRACTOR SHALL SUBCONTRACT WITH SUPPLIERS AND FABRICATION AND INSTALLATION COMPANIES WHICH CAN DEMONSTRATE THAT THEY POSSESS THE KNOWLEDGE, EXPERIENCE, AND PROVEN CAPABILITIES TO FULLY PERFORM ALL ASPECTS OF THE WORK REQUIRED WITHOUT OMISSION.
26. STATIONING IS BASED ON MAP COORDINATES. ACTUAL STATIONING SHALL BE RECORDED BY THE CONTRACTOR AND INCLUDED IN THE RECORD DRAWINGS.
27. CONCRETE
    - REMOVABLE CAP STRIPS AND SAW CUTTING OF JOINTS SHALL NOT BE ALLOWED UNLESS APPROVED BY ENGINEER PRIOR TO USE.
    - CONTROL JOINTS SHALL BE TOOLED TO HAVE A 1/4" WIDTH AND A DEPTH EQUAL TO 1/4 OF CONCRETE THICKNESS.
    - CONTROL JOINT SPACING SHALL MATCH THE EXISTING SPACING ADJACENT TO AS DIRECTED BY ENGINEER.
    - FINAL FINISH OF CONCRETE PAVEMENT SHALL BE A BURLAP FINISH. FINISHING WORK SHALL BE PERFORMED WHEN THE WATER SHEEN HAS PRACTICALLY DISAPPEARED.
    - ALL EXPOSED CONCRETE EDGES TOOLED UNLESS OTHERWISE NOTED.
    - ALL CONCRETE PAVEMENT JOINTS SHALL BE SEALED WITH "SELF LEVELING" SEALANT MEETING THE MATERIAL REQUIREMENT OF SPECIFICATION SECTION 3300.
    - CONCRETE SHALL MEET A 4000 PSI MIX DESIGN AS SPECIFIED IN SECTION 3300 OF THE SPECIFICATIONS UNLESS NOTED OTHERWISE.
28. UTILITIES
    - CONTRACTOR TO USE CAUTION AROUND EXISTING UTILITY.
31. REBAR
    - ALL REBAR SPECIFIED SHALL BE EPOXY COATED.
    - WELDED WIRE FABRIC DOES NOT HAVE TO BE EPOXY COATED.
32. JOINT SEALER PER 3300 SPECIFICATIONS.
33. SIZE AND LOCATION OF EQUIPMENT PADS AND ANCHOR BOLTS SHALL BE PER EQUIPMENT MANUFACTURERS REQUIREMENTS.
34. ANY EQUIPMENT THAT MAY INDUCE VIBRATION TO THE STRUCTURE SHALL BE ADEQUATELY ISOLATED FROM THE STRUCTURES.
35. ALL DETAILS AND SECTIONS SHOWN ON THE DRAWINGS ARE INTENDED TO BE TYPICAL AND SHALL BE CONSTRUED TO APPLY TO ANY SIMILAR SITUATION ELSEWHERE ON THE PROJECT, EXCEPT WHERE A DIFFERENT DETAIL IS SHOWN.
36. STANDARD DETAILS APPLY TO ALL SIMILAR SITUATIONS ON THE PROJECT, EXCEPT WHERE A DIFFERENT DETAIL IS SHOWN.

SHEET INDEX:

GENERAL

COVER SHEET	G0.0
SITE LOCATION MAP, SHEET INDEX & NOTES	G1.0
PROJECT QUANTITIES, LEGEND & ABBREVIATIONS	G1.1

CIVIL

EXISTING SITE & DEMOLITION PLAN	C1.0
PROPOSED SITE PLAN	C2.0

ARCHITECTURAL

30'x80' POLE BARN PLAN & SECTIONS	A1.0
30'x80' POLE BARN SECTIONS & DETAILS	A1.1
30'x140' POLE BARN PLAN & SECTION	A2.0
30'x140' POLE BARN SECTIONS & DETAILS	A2.1

GENERAL STRUCTURAL NOTE(S):

REINFORCING STEEL:
1. REINFORCEMENT SHALL CONFORM TO ASTM A615, GRADE 60 REQUIREMENTS.
2. ALL ACCESSORIES SHALL BE IN CONFORMANCE WITH ACI 315 REQUIREMENTS. REINFORCING STEEL SHALL HAVE THE FOLLOWING CLEAR COVER UNLESS OTHERWISE SPECIFIED:
   - CONCRETE CAST AGAINST EARTH — 3"
   - FORMED SURFACES IN CONTACT WITH SOIL, SEWAGE, WATER OR EXPOSED WEATHER — 2"
   - FORMED SURFACES NOT EXPOSED TO WEATHER OR IN CONTACT WITH SOIL:
     - SLABS, WALLS AND JOISTS — 3/4"
     - BEAMS AND COLUMNS — 1-1/2"
3. THE CONTRACTOR SHALL PREPARE PLACING DRAWINGS AND SCHEDULES IN CONFORMANCE WITH ACI 315 REQUIREMENTS.

PRECAST PRESTESSED CONSTRUCTION:
1. ALL PRECAST PRESTRESSED MEMBERS SHALL BE DESIGNED BY A MISSISSIPPI REGISTERED PROFESSIONAL ENGINEER FOR THE SUPERIMPOSED LOADS SHOWN ON THE DRAWINGS IN CONFORMANCE WITH THE REQUIREMENTS OF APPLICABLE SPECIFICATIONS. EQUIPMENT LOADS AND OTHER LOADING SUCH AS PREFABRICATED ENCLOSURES SHALL BE CONSIDERED AS REQUIRED.

CONCRETE:
1. ALL MATERIALS AND METHODS OF CONSTRUCTION SHALL BE IN ACCORDANCE WITH ACI 318 REQUIREMENTS.
2. ALL CONCRETE SHALL BE AIR-ENTRAINED WITH 4000 PSI COMPRESSIVE STRENGTH AT 28 DAYS UNLESS OTHERWISE SPECIFIED.
3. WATER REDUCING AGENT SHALL BE IN ACCORDANCE WITH ASTM C494
4. ALL CONCRETE SURFACES EXPOSED TO AIR, UNLESS OTHERWISE NOTED IN SPECIFICATIONS, SHALL BE TREATED WITH AN APPROPRIATE CURING COMPOUND AS SOON AS CEMENT FINISHING IS COMPLETED OR FORMS ARE REMOVED.
5. ALL EXPOSED CORNERS OF CONCRETE SHALL HAVE A MINIMUM CHAMFER OF 3/4", UNLESS OTHERWISE SPECIFIED.
6. THE CONTRACTOR SHALL OBTAIN ENGINEER'S APPROVAL FOR THE LOCATION OF CONSTRUCTION JOINTS THAT ARE NOT SHOWN ON THE DRAWING.

DESIGN CRITERIA:
CODES:
-INTERNATIONAL BUILDING CODE 2006
-OTHER STRUCTURES: ACI 318 "BUILDING CODE REQUIREMENTS FOR REINFORCED CONCRETE"

DESIGN LOADS:

LIVE LOADS:		
-STAIRWAYS	100	PSF
-WALKWAYS	100	PSF
-ELEVATED SLABS	100	PSF
-SLABS ON GRADE	100	PSF
SUPERIMPOSED DEADLOADS:		
-ROOFS	20	PSF
-FLOORS	100	PSF
WINDLOADS:		
-BASIC WIND SPEED	140	MPH
-EXPOSURE CATEGORY	C	
-IMPORTANCE FACTOR	1.0	
EARTHQUAKE:		
-SEISMIC DESIGN CATEGORY	A	

CONCRETE 28-DAY STRENGTH:

-COLUMNS, BEAMS, SLABS, WALLS, FOOTINGS	4000	PSI
-MASONRY FILLED CELL GROUT	2500	PSI
-PRESTRESSED ELEMENTS	5000	PSI

REINFORCING STEEL:
-ALL BARS ASTM A615, GRADE 60
-WELDED WIRE FABRIC ASTM A185

STRUCTURAL STEEL:
-ALL STRUCTURAL STEEL AND MISCELLANEOUS STEEL A36, UNLESS OTHERWISE SPECIFIED

COMPTON ENGINEERING, INC.
ENGINEERING, SURVEYING & ENVIRONMENTAL SERVICES
PASCAGOULA • BILOXI • BAY ST. LOUIS
228-762-3970 228-432-2133 228-467-2770
www.comptonengineering.com

CITY OF WAVELAND PUBLIC WORKS FACILITY

POLE BARN REPLACEMENT(S) PROJECT
SITE LOCATION MAP, SHEET INDEX & NOTES

SCALE:	AS NOTED
JOB NO.:	221-019.006
DATE:	
DSGN:	D. HERRINGTON
DWG:	T. PARKER
CHKD:	
APPD:	B. ESCHER

ENGINEER

G1.0

Rev. No. 0

DATE	DESCRIPTION	BY	APPD
8-29-22	ISSUED FOR RE-BID	TP	BE
10-20-22	ISSUED FOR CONSTRUCTION	TP	BE

N:\...\221-...City of Waveland - Multiple Projects Directed to Hurricane Zeta\221-019.006 - Waveland Public Works\Dwgs\Current Design\Concept-Design\G1.0.dwg, 10/20/2022 3:18:38 PM, tommy, \\BSL-FS-02\RICOH Aficio SP C830DN PCL 6

PROPRIETARY RIGHTS CLAUSE: INFORMATION AND DATA CONTAINED ON THIS DRAWING IS CONFIDENTIAL. IF GIVEN TO AN ENTITY NOT HAVING A CONTRACTUAL RELATIONSHIP WITH THE ENGINEER, THE INFORMATION SHALL NOT BE USED WITHOUT PRIOR WRITTEN PERMISSION. THIS LEGEND SHALL BE MARKED ON ANY REPRODUCTIONS HEREOF IN WHOLE OR IN PART. COMPTON ENGINEERING, INC. © COPYRIGHT 1991.

1 / C1.0 EXISTING SITE / DEMO PLAN
SCALE: 1" - 20'

COMPTON ENGINEERING, INC.
ENGINEERING, SURVEYING & ENVIRONMENTAL SERVICES
PASCAGOULA • BILOXI • BAY ST. LOUIS
228-762-3970 228-432-2133 228-467-2770
www.comptonengineering.com

CITY OF WAVELAND
PUBLIC WORKS FACILITY

POLE BARN REPLACEMENT(S) PROJECT
EXISTING SITE / DEMO PLAN

SCALE:	AS NOTED
JOB NO.:	221-019.006
DATE:	
DSGN.:	B. ESCHER
DWG. BY:	T. PARKER
CHK.:	D. HERRINGTON
APV'D.:	

VERIFY SCALES
BAR IS ONE INCH ON ORIGINAL DRAWING. IF NOT ONE INCH ON THIS SHEET ADJUST SCALES ACCORDINGLY.
0 1"

C1.0

Rev. No. 0

	DATE	DESCRIPTION	BY	APV'D
2	8-29-22	ISSUED FOR RE-BID	TP	BE
1	10-20-22	ISSUED FOR CONSTRUCTION	TP	BE

PROPRIETARY RIGHTS CLAUSE: INFORMATION AND DATA CONTAINED ON THIS DRAWING IS CONFIDENTIAL. IF GIVEN TO AN ENTITY NOT HAVING A CONTRACTUAL RELATIONSHIP WITH THE ENGINEER, THE INFORMATION SHALL NOT BE USED WITHOUT PRIOR WRITTEN PERMISSION. THIS LEGEND SHALL BE MARKED ON ANY REPRODUCTIONS HEREOF IN WHOLE OR IN PART. COMPTON ENGINEERING, INC. © COPYRIGHT 1994.

1 / C2.0 PROPOSED SITE PLAN
SCALE: 1" - 20'

COMPTON ENGINEERING, INC.
ENGINEERING, SURVEYING & ENVIRONMENTAL SERVICES
PASCAGOULA • BILOXI • BAY ST. LOUIS
228-762-3970 228-432-2133 228-467-2770
www.comptonengineering.com

CITY OF WAVELAND
PUBLIC WORKS FACILITY

POLE BARN REPLACEMENT(S) PROJECT
PROPOSED SITE PLAN

SCALE:	AS NOTED
JOB NO.:	221-019.006
DATE:	
DSGN.:	B. ESCHER
DWG. BY:	T. PARKER
CHK.:	D. HERRINGTON
APV'D.:	

VERIFY SCALES
BAR IS ONE INCH ON ORIGINAL DRAWING. IF NOT ONE INCH ON THIS SHEET ADJUST SCALES ACCORDINGLY.
0 1"

C2.0

Rev. No. 0

	DATE	DESCRIPTION	BY	APV'D
1	8-29-22	ISSUED FOR RE-BID	TP	BE
0	10-20-22	ISSUED FOR CONSTRUCTION	TP	BE

PROPRIETARY/COPYRIGHT CLAUSE: INFORMATION AND DATA CONTAINED ON THIS DRAWING IS CONFIDENTIAL. IF GIVEN TO AN ENTITY NOT HAVING A CONTRACTUAL RELATIONSHIP WITH THE ENGINEER, THE INFORMATION SHALL NOT BE USED WITHOUT PRIOR WRITTEN PERMISSION. THIS LEGEND SHALL BE MARKED ON ANY REPRODUCTIONS HEREOF IN WHOLE OR IN PART. COMPTON ENGINEERING, INC. © COPYRIGHT 1994.

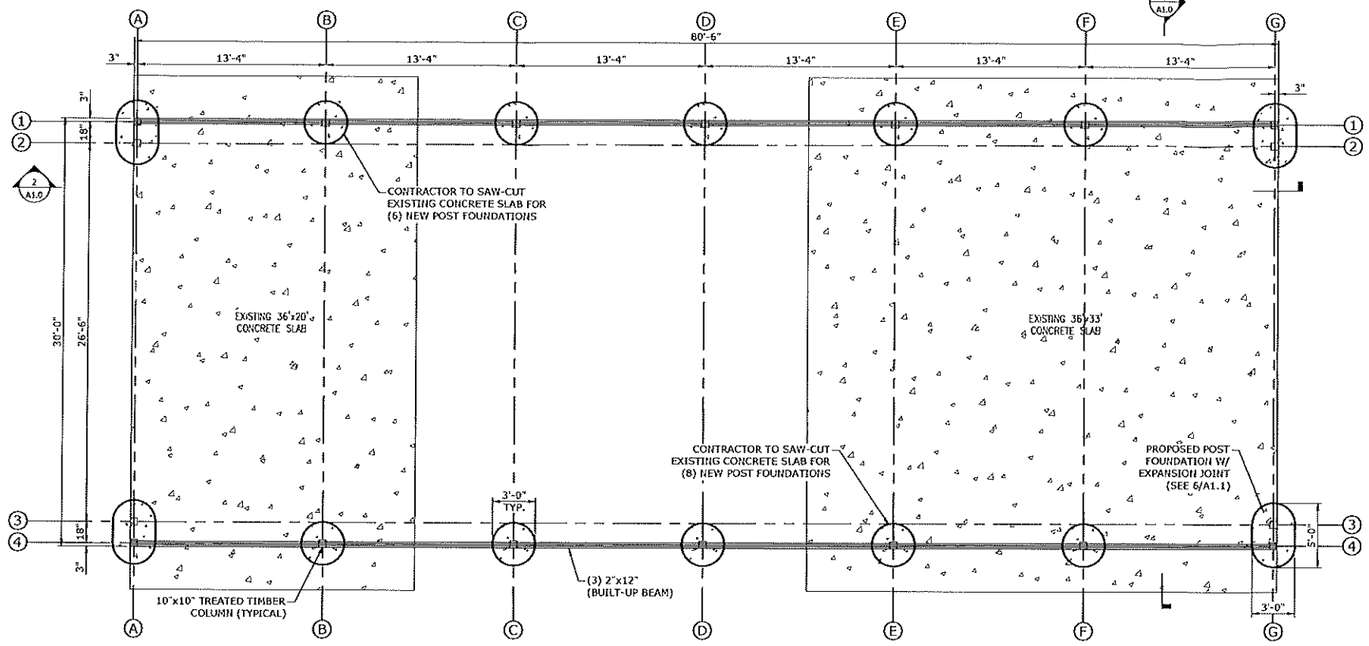

1 / A1.0 PROPOSED PLAN VIEW
SCALE: 3/16" = 1'-0"

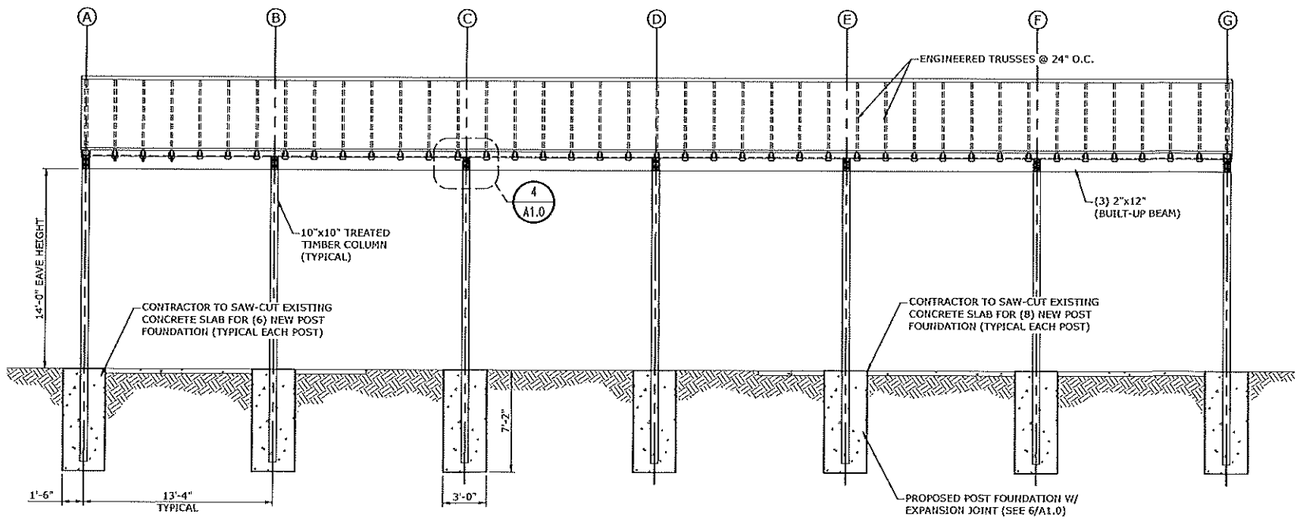

2 / A1.0 PROPOSED SECTION
SCALE: 3/16" = 1'-0"

DATE	DESCRIPTION	BY	APV'D
8-29-22	ISSUED FOR RE-BID	TP	BE
10-20-22	ISSUED FOR CONSTRUCTION	TP	BE

COMPTON ENGINEERING, INC.
ENGINEERING, SURVEYING & ENVIRONMENTAL SERVICES
PASCAGOULA • BILOXI • BAY ST. LOUIS
228-762-3970 228-432-2133 228-467-2770
www.comptonengineering.com

CITY OF WAVELAND
PUBLIC WORKS FACILITY

POLE BARN REPLACEMENT(S) PROJECT
30'x80' POLE BARN PLAN, SECTION

SCALE:	AS NOTED
JOB NO.:	221-019.006
DATE:	
DSGN.:	B. ESCHER
DWG. BY:	T. PARKER
CHK.:	D. HERRINGTON
APV'D.:	

VERIFY SCALES
BAR IS ONE INCH ON ORIGINAL DRAWING. IF NOT ONE INCH ON THIS SHEET ADJUST SCALES ACCORDINGLY

A1.0

Rev. No. 0

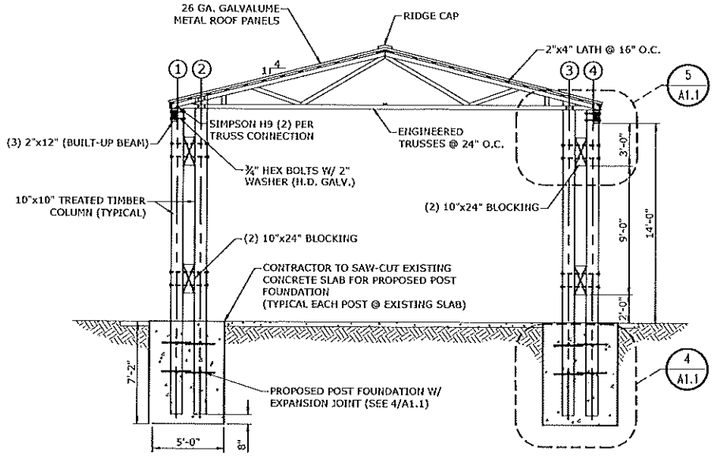

1 A1.1 PROPOSED SECTION
SCALE: 3/16" = 1'-0"

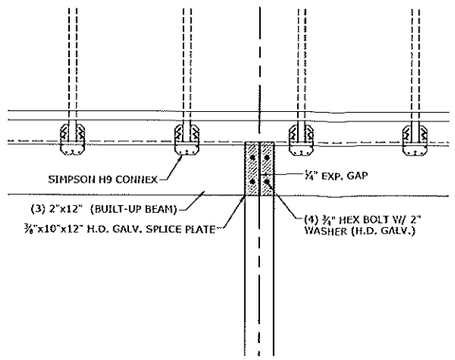

2 A1.1 SUPPORT CONNEX. DETAIL
SCALE: 3/4" = 1'-0"

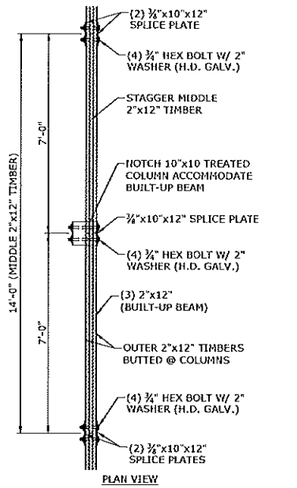

3 A1.1 BUILT-UP BEAM DETAIL
SCALE: 3/4" = 1'-0"

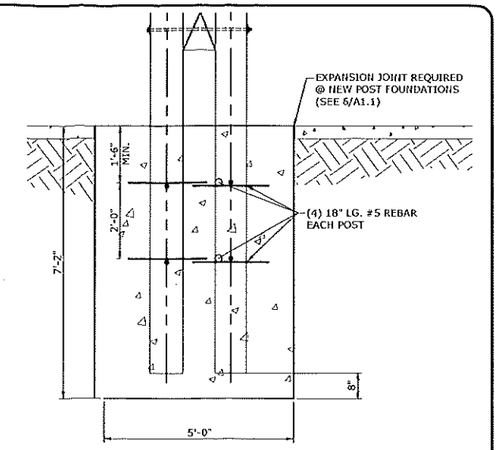

4 A1.1 POST FOUNDATION DETAIL
SCALE: 1/2" = 1'-0"

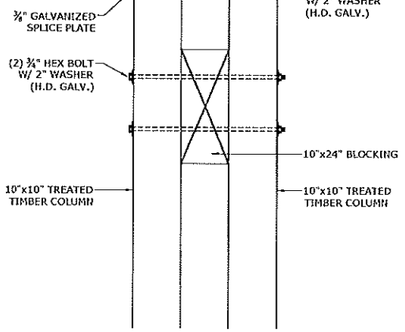

5 A1.1 ENLARGED SECTION
SCALE: 1/2" = 1'-0"

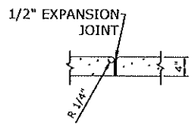

6 A1.1 EXPANSION JOINT DETAIL
SCALE: 1/2" = 1'-0"

PROPRIETARY RIGHTS CLAUSE: INFORMATION AND DATA CONTAINED ON THIS DRAWING IS CONFIDENTIAL. IF GIVEN TO AN ENTITY NOT HAVING A CONTRACTUAL RELATIONSHIP WITH THE ENGINEER, THE INFORMATION SHALL NOT BE USED WITHOUT PRIOR WRITTEN PERMISSION. THIS LEGEND SHALL BE MARKED ON ANY REPRODUCTIONS MADE IN WHOLE OR IN PART. COMPTON ENGINEERING, INC. © COPYRIGHT 1974.

COMPTON ENGINEERING, INC.
ENGINEERING, SURVEYING & ENVIRONMENTAL SERVICES
PASCAGOULA • BILOXI • BAY ST. LOUIS
228-762-5970 228-432-2133 228-467-2770
www.comptonengineering.com

CITY OF WAVELAND
PUBLIC WORKS FACILITY

POLE BARN REPLACEMENT(S) PROJECT
30'x80' POLE BARN SECTIONS & DETAILS

SCALE: AS NOTED
JOB NO.: 221-0119.006
DATE:
DSGN.: B. ESCHER
DWG. BY: T. PARKER
CHK.: D. HERRINGTON
APV'D.:

VERIFY SCALES
DATA IS DRC NON-ON-EDITABLE DRAWING. DIMENSIONS ARE TO BE DIRECTLY ADJUST ACCORDINGLY.

1" 0

A1.1

Rev. No.	DATE	DESCRIPTION	BY	APV'D
1	8-29-22	ISSUED FOR RE-BID	TP	BE
0	10-20-22	ISSUED FOR CONSTRUCTION	TP	BE

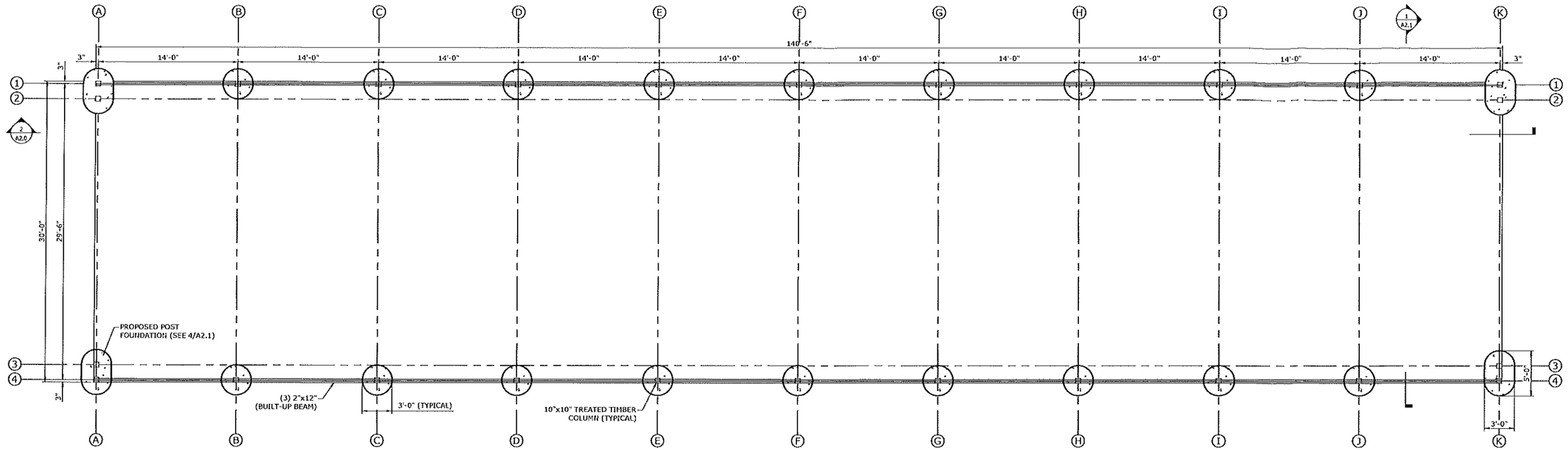

1 A2.0 PROPOSED PLAN VIEW
SCALE: 3/16" = 1'-0"

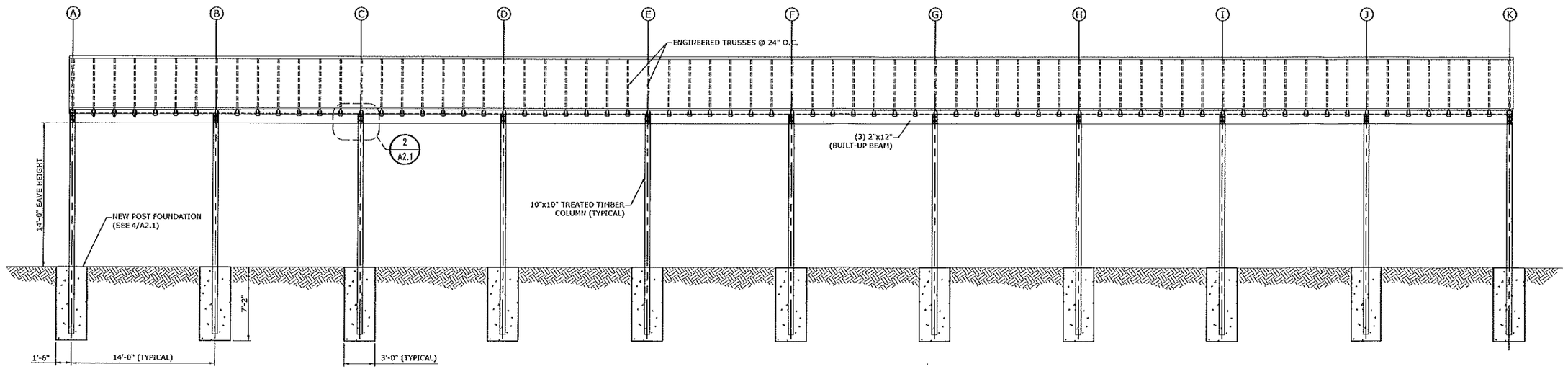

2 A2.0 PROPOSED SECTION
SCALE: 3/16" = 1'-0"

	DATE	DESCRIPTION	BY	APV'D
A	8-29-22	ISSUED FOR RE-BID	TP	BE
B	10-20-22	ISSUED FOR CONSTRUCTION	TP	BE

COMPTON ENGINEERING, INC.
ENGINEERING, SURVEYING & ENVIRONMENTAL SERVICES
PASCAGOULA • BILOXI • BAY ST. LOUIS
228-762-3970 228-432-2133 228-467-2770
www.comptonengineering.com

CITY OF WAVELAND
PUBLIC WORKS FACILITY

POLE BARN REPLACEMENT(S) PROJECT
30'x140' POLE BARN PLAN & SECTION

SCALE: AS NOTED
JOB NO.: 221-033.007
DATE:
DSGN.: B. ESCHER
DWG. BY: T. PARKER
CHK.: D. HERRINGTON
APV'D.:

VERIFY SCALES
BAR IS ONE INCH ON ORIGINAL DRAWING. IF NOT ONE INCH ON THIS SHEET ADJUST SCALES ACCORDINGLY.

A2.0

REV. NO. 0

PROPRIETARY RIGHTS CLAUSE: INFORMATION AND DATA CONTAINED ON THIS DRAWING IS CONFIDENTIAL. IT GIVEN TO AN ENTITY NOT HAVING A CONTRACTUAL RELATIONSHIP WITH THE ENGINEER, THE INFORMATION SHALL NOT BE USED WITHOUT PRIOR WRITTEN PERMISSION. THIS LEGEND SHALL BE MARKED ON ANY REPRODUCTIONS MADE IN WHOLE OR IN PART. COMPTON ENGINEERING, INC. © COPYRIGHT 1994.

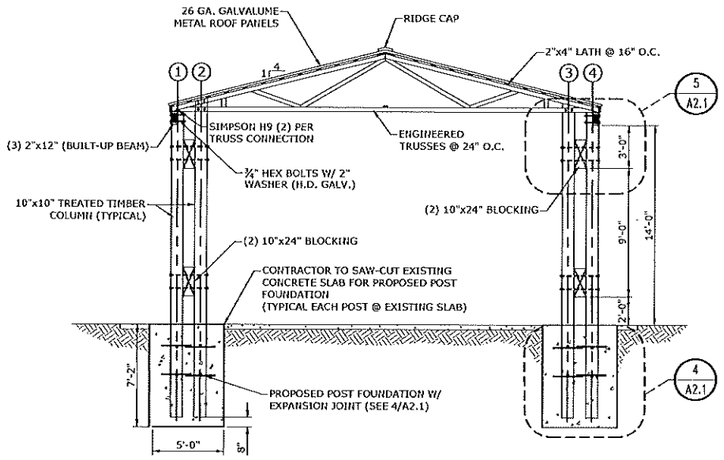

1 / A2.1 PROPOSED SECTION
SCALE: 3/16" = 1'-0"

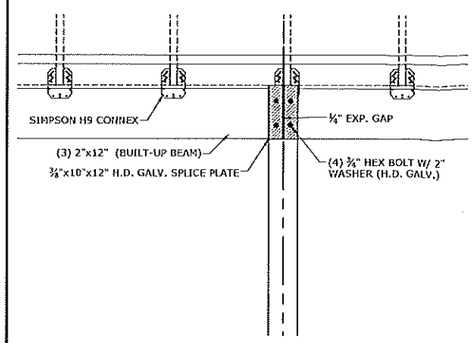

2 / A2.1 SUPPORT CONNEX. DETAIL
SCALE: 3/4" = 1'-0"

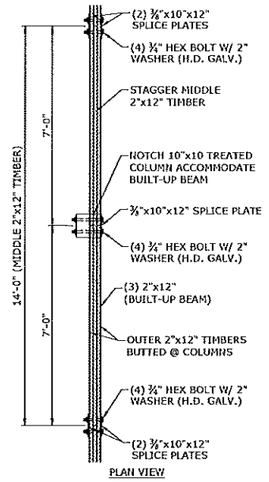

3 / A2.1 BUILT-UP BEAM DETAIL
SCALE: 3/4" = 1'-0"

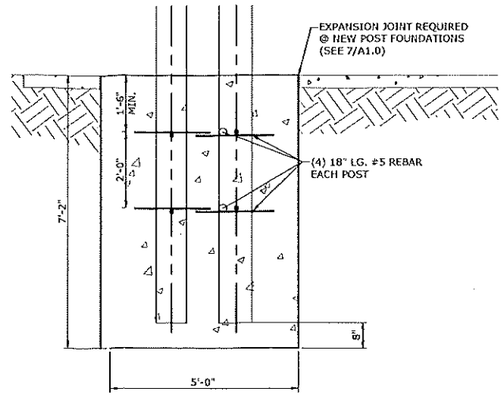

4 / A2.1 POST FOUNDATION DETAIL
SCALE: 1/2" = 1'-0"

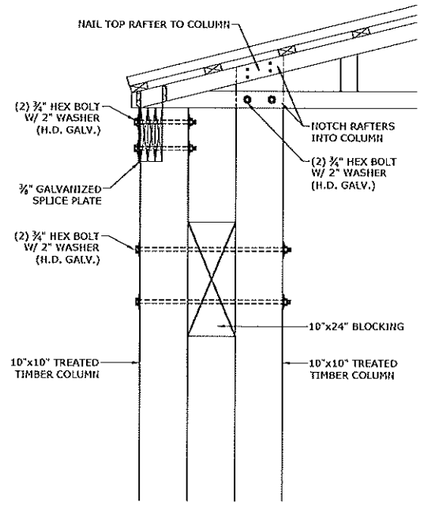

5 / A2.1 ENLARGED SECTION
SCALE: 1/2" = 1'-0"

PROPRIETARY RIGHTS CLAUSE: INFORMATION AND DATA CONTAINED ON THIS DRAWING IS CONFIDENTIAL. IF GIVEN TO AN ENTITY NOT HAVING A CONTRACTUAL RELATIONSHIP WITH THE ENGINEER, THE INFORMATION SHALL NOT BE USED WITHOUT PRIOR WRITTEN PERMISSION. THIS LEGEND SHALL BE MARKED ON ANY REPRODUCTIONS HEREOF IN WHOLE OR IN PART. COMPTON ENGINEERING, INC. © COPYRIGHT 1991.

COMPTON ENGINEERING, INC.
ENGINEERING, SURVEYING & ENVIRONMENTAL SERVICES
PASCAGOULA • BILOXI • BAY ST. LOUIS
228-762-5970 228-432-2133 228-467-2770
www.comptonengineering.com

CITY OF WAVELAND
PUBLIC WORKS FACILITY

POLE BARN REPLACEMENT(S) PROJECT
30'x140' POLE BARN SECTIONS & DETAILS

SCALE:	AS NOTED
JOB NO.:	221-033.007
DATE:	
DSGN.:	B. ESCHER
DWG. BY:	T. PARKER
CHK.:	D. HERRINGTON
APV'D.:	

VERIFY SCALES
BAR IS ONE INCH ON ORIGINAL DRAWING IF NOT ONE INCH ON THIS SHEET ADJUST SCALES ACCORDINGLY

A2.1

REV.	DATE	DESCRIPTION	BY	APV'D
0	8-29-22	ISSUED FOR RE-BID	TP	BE
1	10-20-22	ISSUED FOR CONSTRUCTION	TP	BE